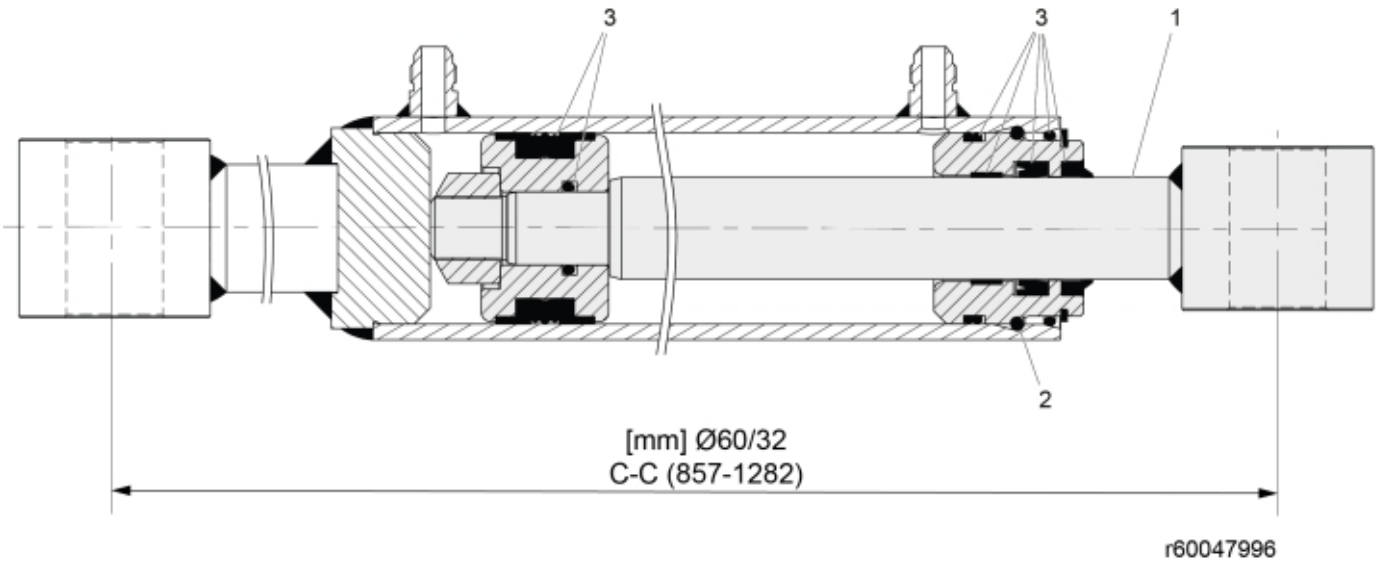

© 2025 Jost

Description	60/32
Part assemblies	Tilt Cylinder
Specification	Specification: Glossy Black. Replaces 12726310-1

PartNo	Pos	Qty	Name	Specifications
60048018	1	1	Piston rod cpl.	
5017000	2	1	• Retaining ring	
60048039	3	1	• Seal kit	

© 2025 Jost