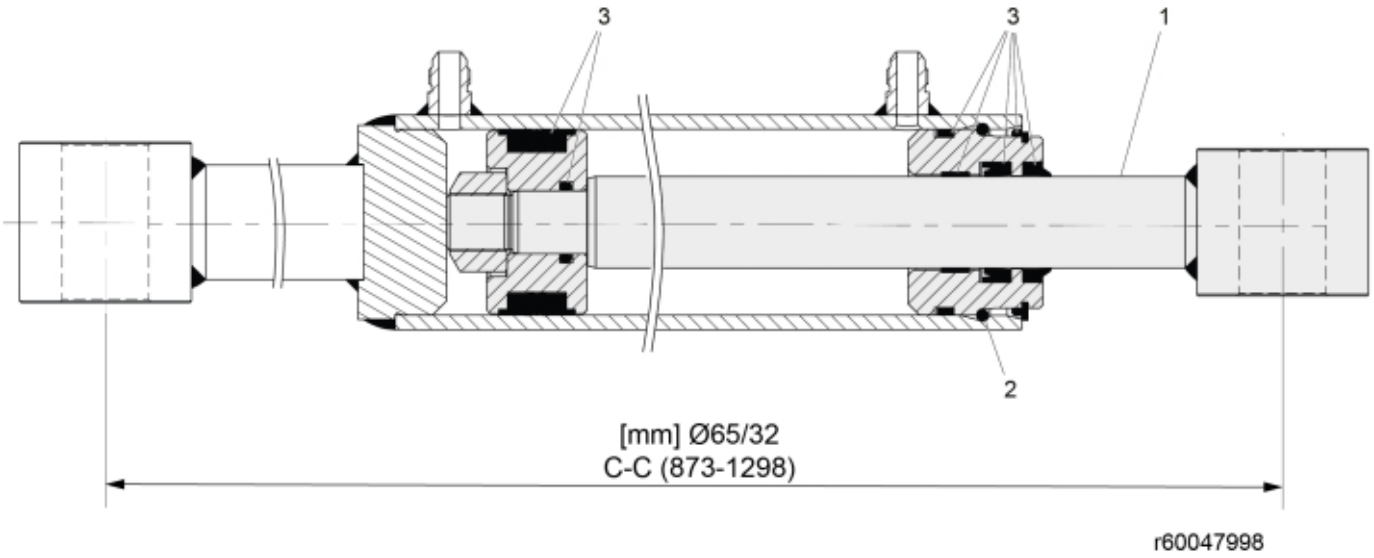



© 2025 Jost

| | |
|---|---|
| **Description** | 65/32 |
| **Part assemblies** | Tilt Cylinder |
| **Specification** | Specification: Glossy Black. Replaces 12718010-1 |

| PartNo | Pos | Qty | Name | Specifications |
|---|---|---|---|---|
| 60048020 | 1 | 1 | Piston rod cpl. | Not available in Oceania / South America |
| 5016668 | 2 | 1 | • Retaining ring | |
| 60048040 | 3 | 1 | Seal kit | |


© 2025 Jost