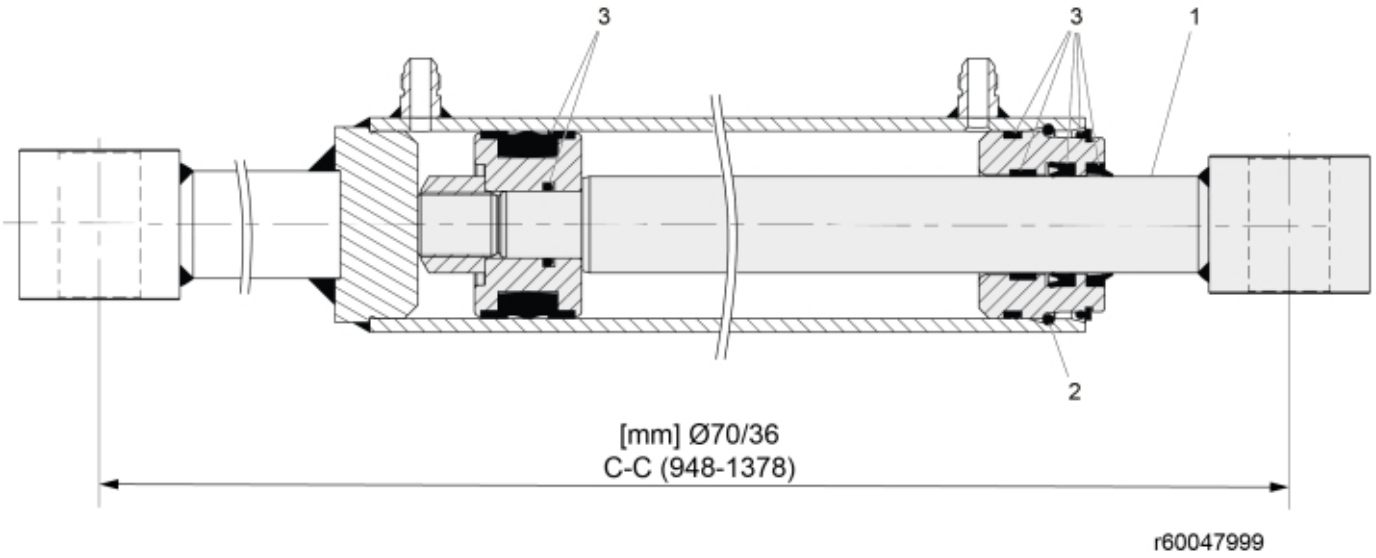

© 2025 Jost

Description	70/36
Part assemblies	Tilt Cylinder
Specification	Specification: Glossy Black

PartNo	Pos	Qty	Name	Specifications
60048021	1	1	Piston rod cpl.	Not available in Oceania / South America
5016669	2	1	• Retaining ring	
60048041	3	1	Seal kit	

© 2025 Jost