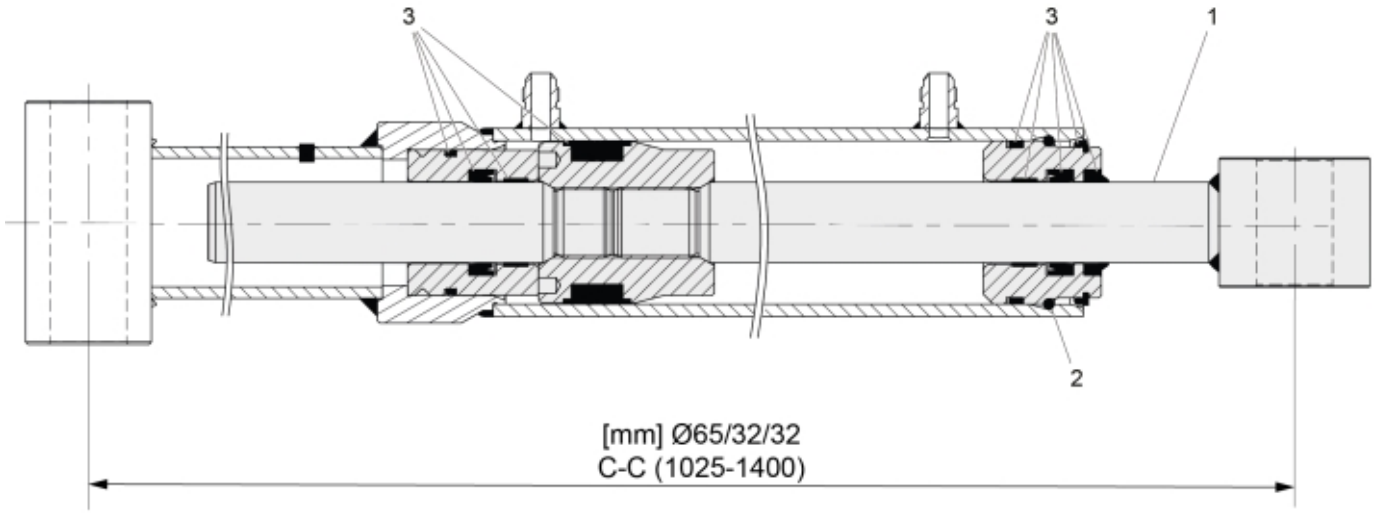

© 2025 Jost

Description	65/32/32
Part assemblies	Tilt Cylinder
Specification	Specification: Glossy Black

PartNo	Pos	Qty	Name	Specifications
60048012	1	1	Piston rod cpl.	Not available in Oceania / South America
5016668	2	1	• Retaining ring	
60048034	3	1	Seal kit	

© 2025 Jost