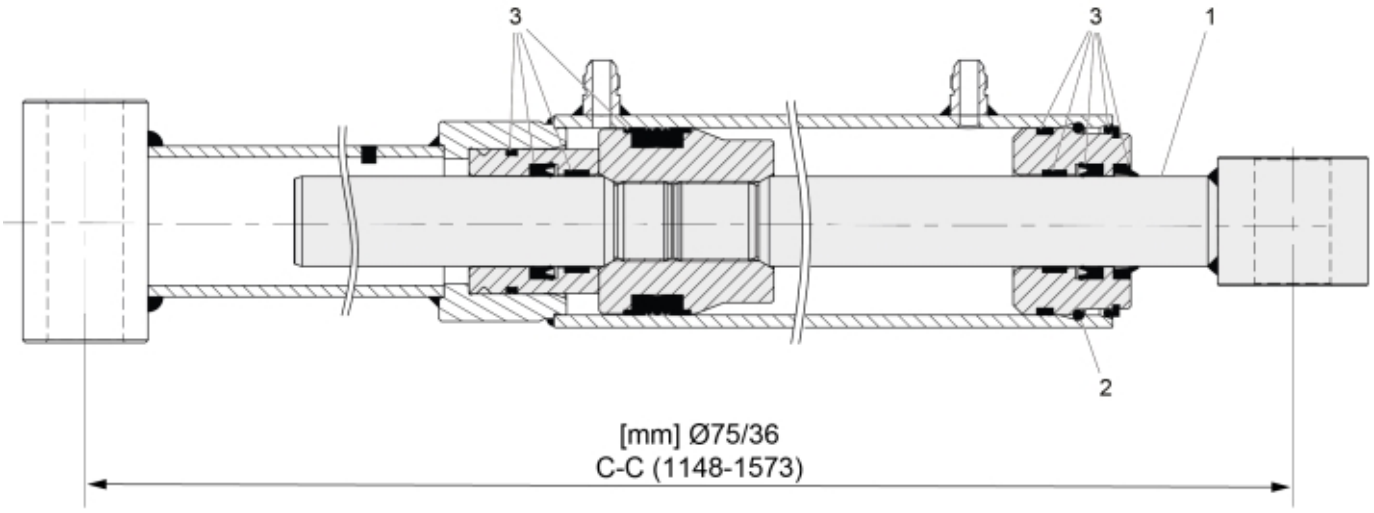

© 2025 Jost

Description	75/36/36
Part assemblies	Tilt Cylinder
Specification	Specification: Glossy Black

PartNo	Pos	Qty	Name	Specifications
60048015	1	1	Piston rod cpl.	Not available in Oceania / South America
5016665	2	1	• Retaining ring	
60048037	3	1	Seal kit	

© 2025 Jost