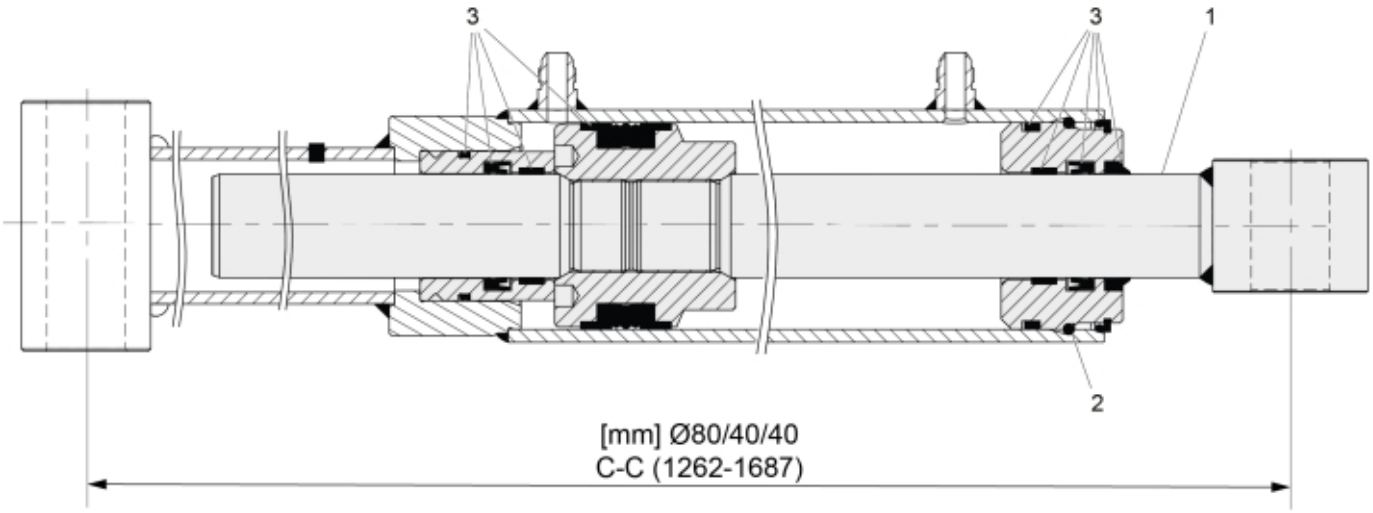

© 2025 Jost

Description	80/40/40
Part assemblies	Tilt Cylinder
Specification	Specification: Glossy Black. Replaces 12718710-1

PartNo	Pos	Qty	Name	Specifications
60049935	1	1	Piston rod cpl.	
5016667	2	1	• Retaining ring	
60049937	3	1	Seal kit	

© 2025 Jost