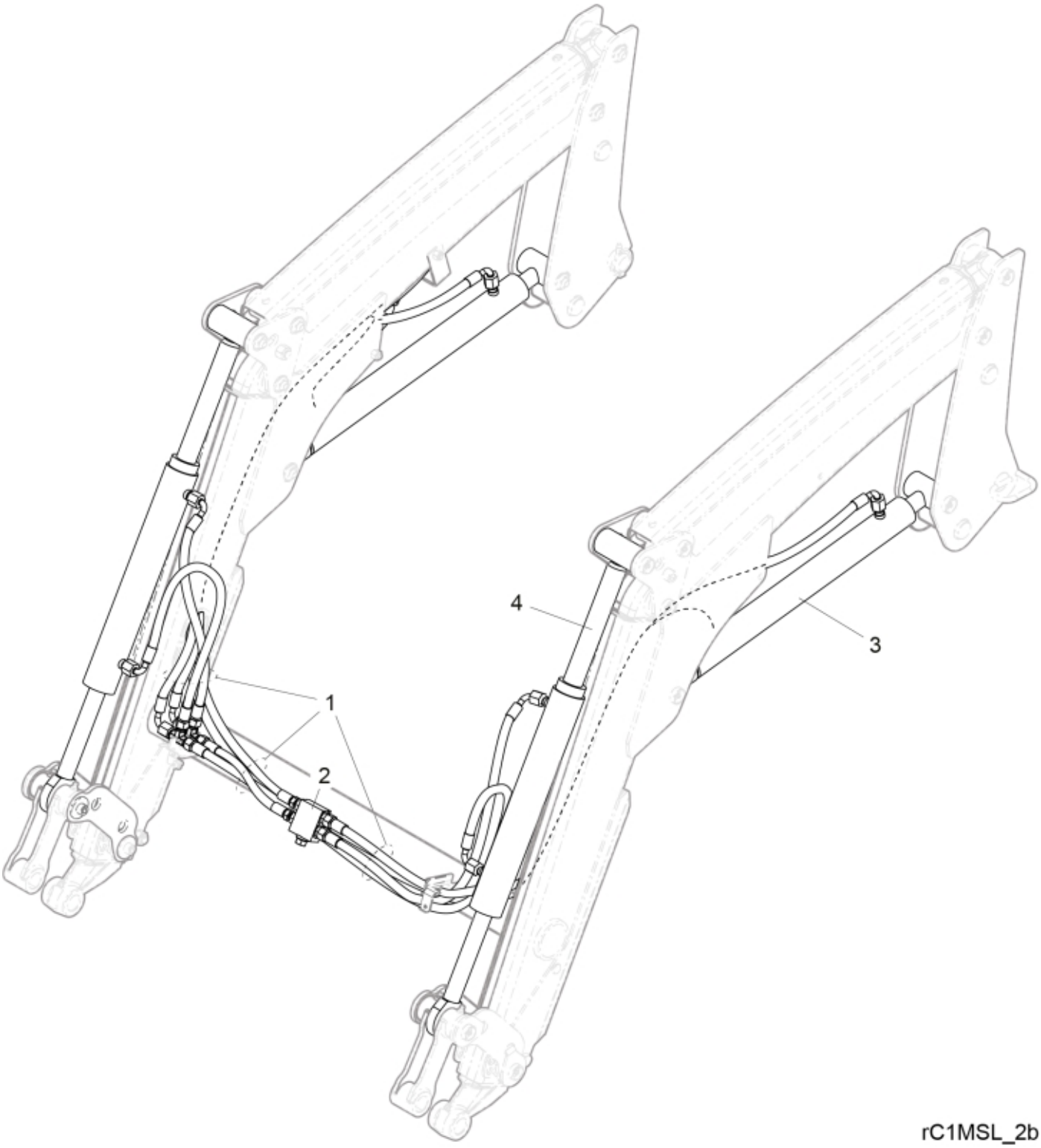


rC1MSL_2b


© 2025 Jost

**Part assemblies** Hydraulics

| PartNo | Pos | Qty | Name | Specifications |
|---|---|---|---|---|
| 60051643 | 1 | 1 PCS | Main hose kit | |
| 60024254 | 2 | 1 | • Relief valve cpl. | |
| 60022177-1 | 3 | 2 PCS | Lift Cylinder | Glossy Black |
| 60029835-1 | 4 | 2 PCS | Tilt Cylinder | Glossy Black |


© 2025 Jost