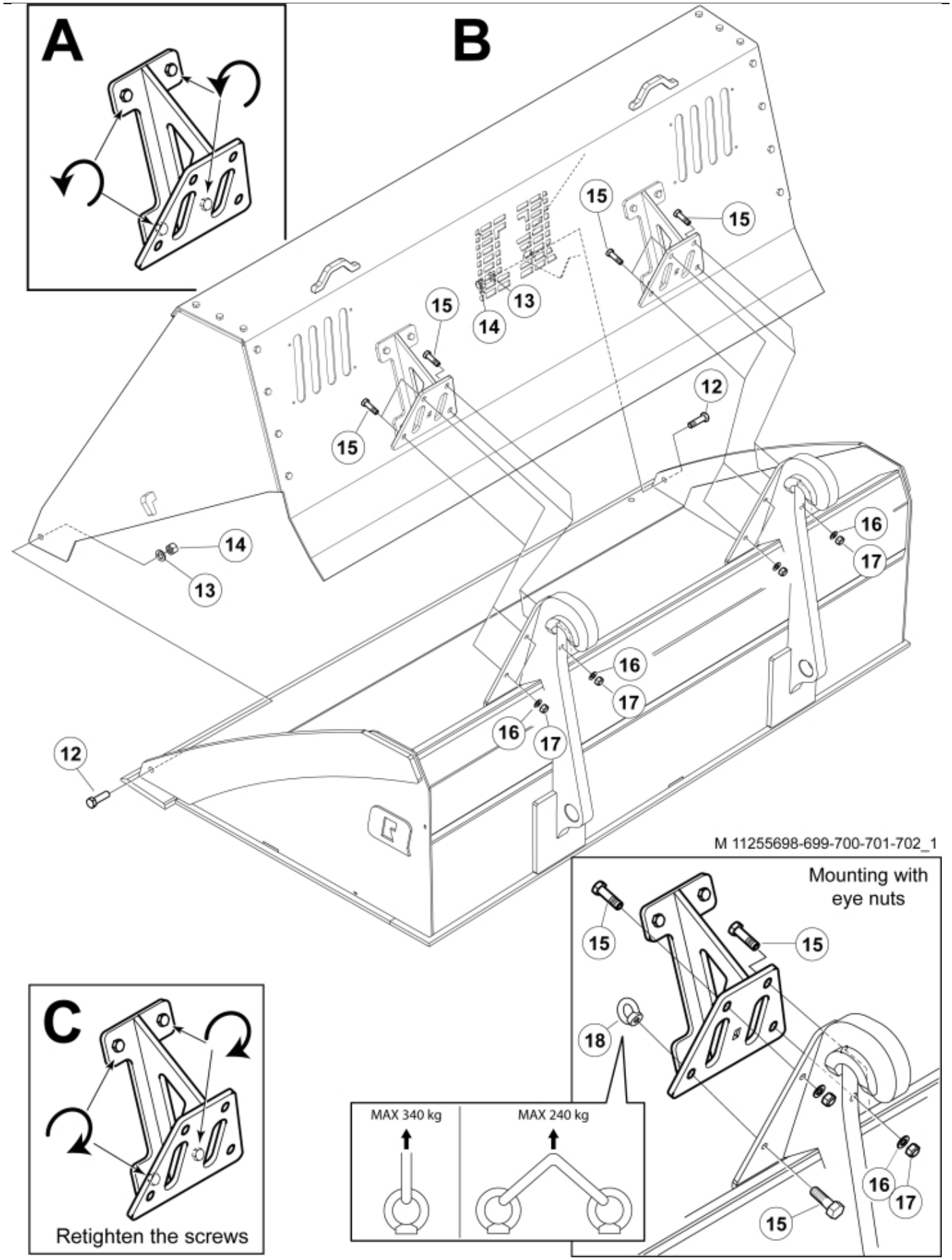
A
B
C
15
14
13
12
16
17
18
M 11255698-699-700-701-702_1
Mounting with eye nuts
MAX 340 kg
MAX 240 kg
Retighten the screws

© 2025 Jost

Spare Part Info

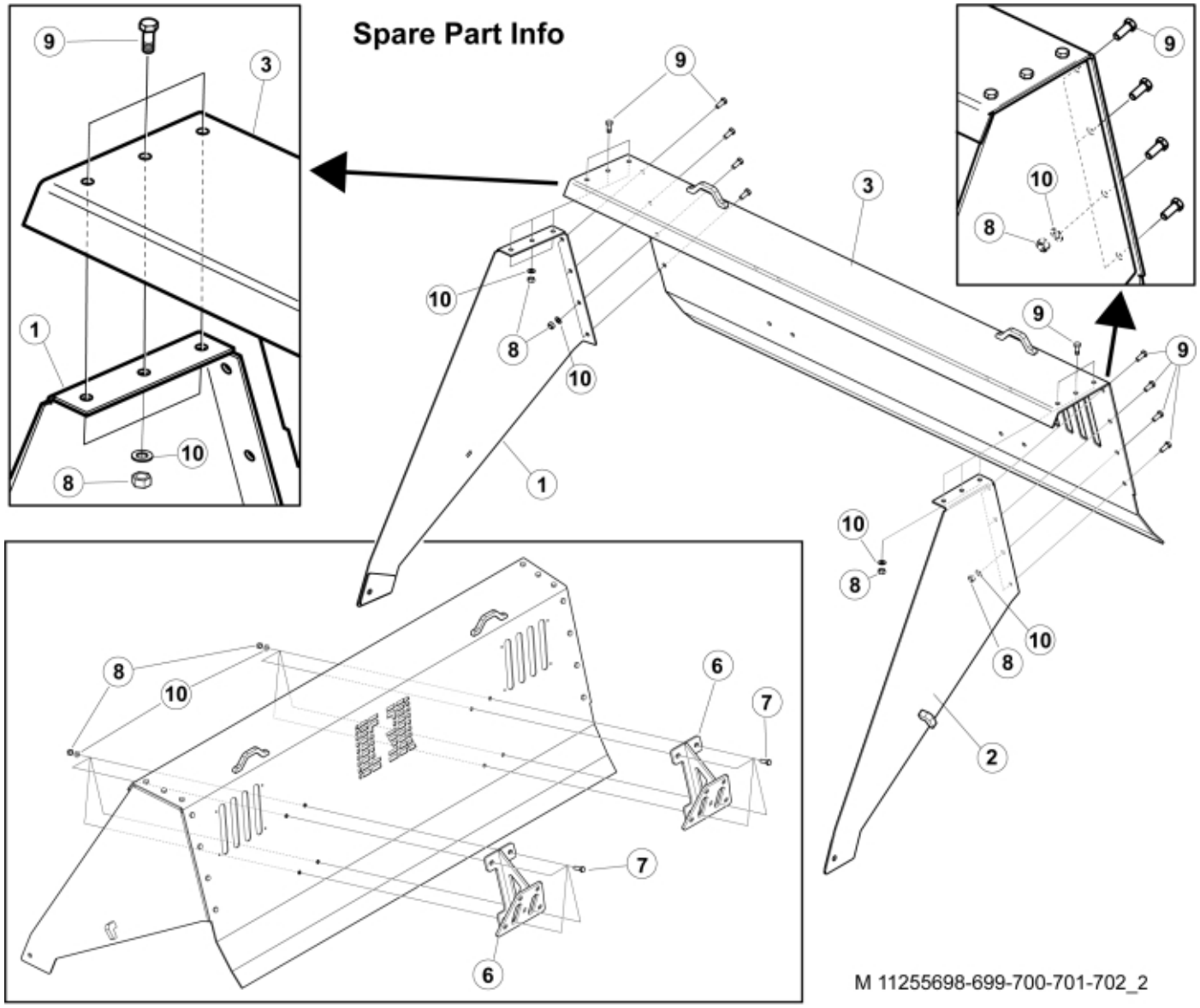

M 11255698-699-700-701-702_2

© 2025 Jost

Description	220
Part assemblies	Extension kit

PartNo	Pos	Qty	Name	Specifications
11255698		1	Extension kit	
60030529	1	1 PCS	Gable RH	
60030531	2	1 PCS	Gable LH	
60059027	3	1 PCS	Plate	
60028820	6	2 PCS	Support	
5002123	7	8	Screw	M6S M12x40 (10.9)
5011911	8	22	Nut	M12
5002102	9	14	Screw	M6S M12X30
5013104	10	22	Washer	13.5 x 24 x 2
5002169	12	2	Screw	M6S M16x55 (8.8)
5051198	13	2 PCS	Washer	M16 BRB
5011557	14	2	Nut	Loc-King M16
5002123	15	8	Screw	M6S M12x40 (10.9)
5013104	16	8	Washer	13.5 x 24 x 2
5011911	17	8	Nut	M12
60034600	18	2 PCS	Eye nut	

© 2025 Jost