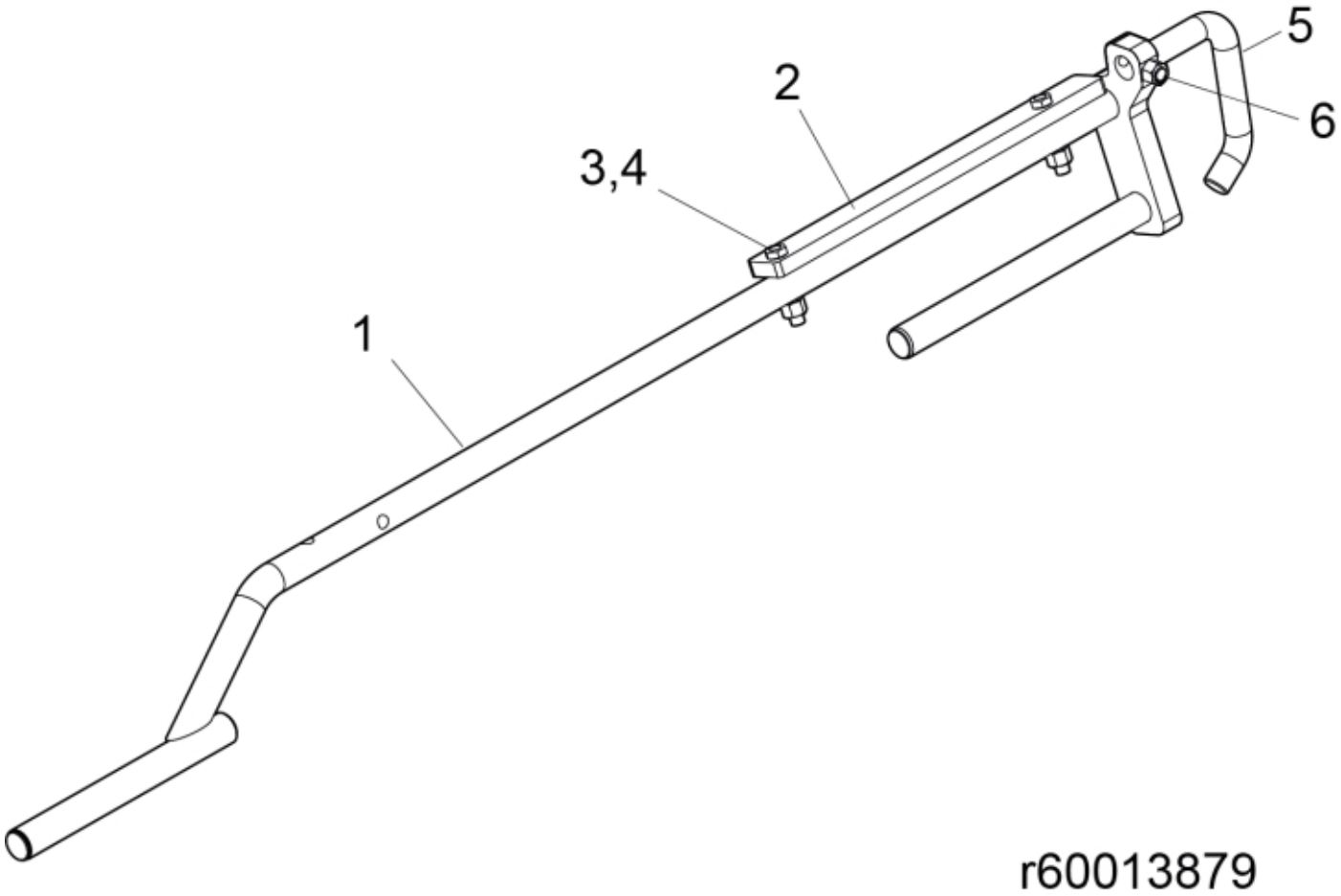

© 2025 Jost

Part assemblies	Locking mechanism cpl.
Specification	Year To: 2/29/2020 12:00:00 AM

PartNo	Pos	Qty	Name	Specifications
60013879		1	Locking mechanism cpl.	2/29/2020 12:00:00 AM On complete level replaced by 4501177
60013270	1	1	• Locking mechanism	Euro DL
60013883	2	1	• Guide plate	
5002055	3	2	• Screw	M6S M8x40
5011553	4	2	• Nut	M6M M8 Loc-king
60013345-48	5	1	• Handle	Euro
5050766	6	1	• Screw	M6S 8x30 (8.8) Loc

© 2025 Jost