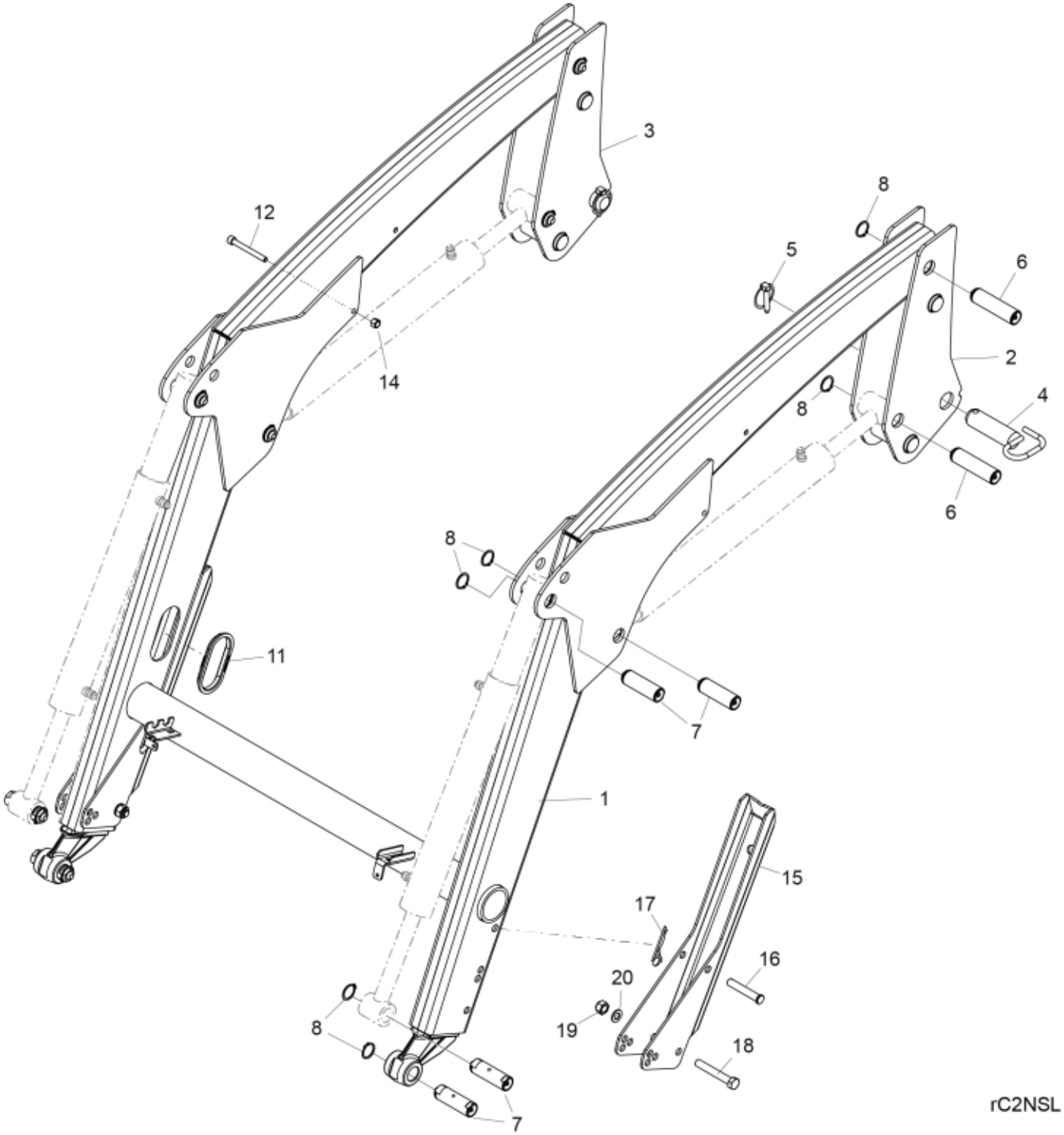

© 2025 Jost

Part assemblies Loader beam

PartNo	Pos	Qty	Name	Specifications
60037869-17	1	1	Loader beam	Black Texture
60021830-17	2	1 PCS	Bearing box LH	Black Texture
60021801-17	3	1 PCS	Bearing box RH	Black Texture
60022562	4	2	Locking Pin	
5017002	5	2	Linch pin	
60018355	6	4	Pin	
60021788	7	8	Pin	
5050817	8	12	Circlip	
60030593	11	2	Edge cover	
5004057	12	1	Screw	MC6S M8 x75 (8.8)
5011553	14	1	Nut	M6M M8 Loc-king
60032806-17	15	2	Support leg	Black Texture
5050830	16	2	Locking Pin	HCB 12x73 FZB
5221186	17	2	Pin clip	□ 12x120
5002121	18	2	Screw	M6S M12x80 (8,8)
5011911	19	2	Nut	M12
5013103	20	2	Washer	BRB 13x24

© 2025 Jost