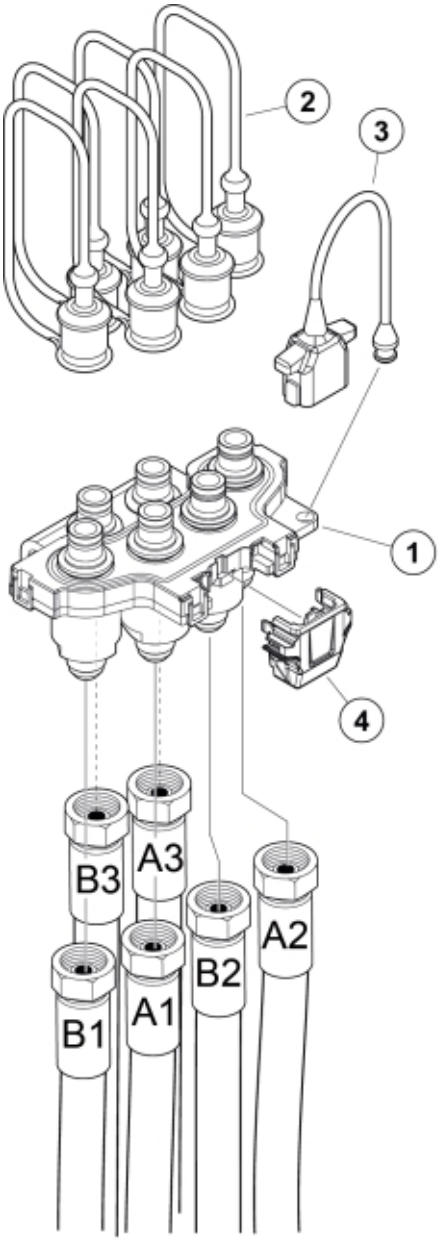

B

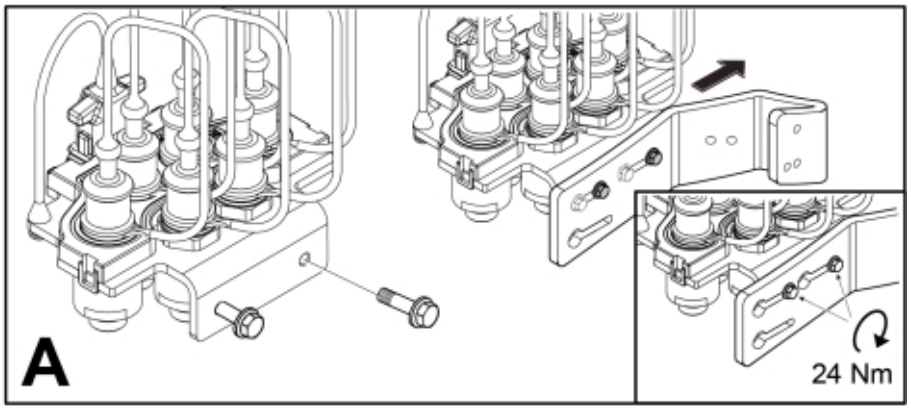

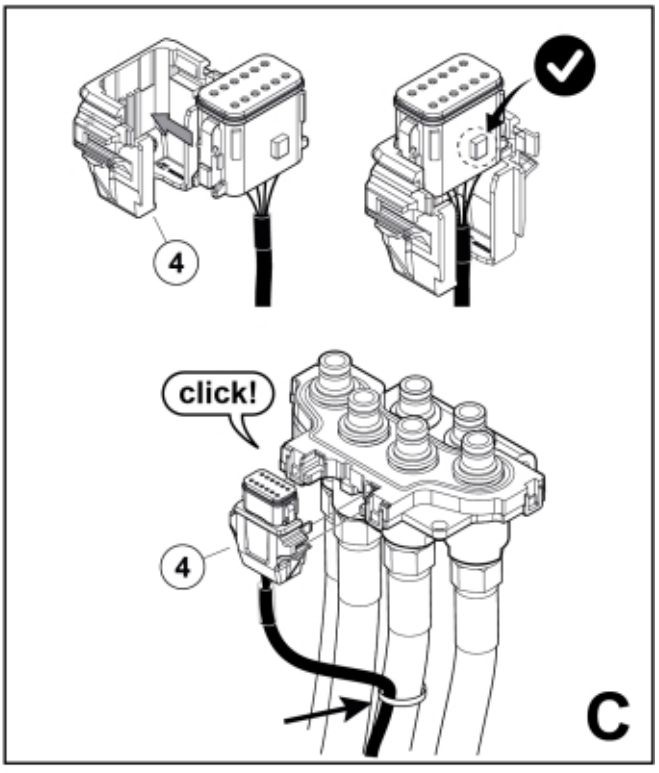

M 59022650

© 2025 Jost

Part assemblies	Single coupling base, cpl

PartNo	Pos	Qty	Name	Specifications
59022650		1	Single coupling base, cpl	
59020650	1	1	Single coupling base, SF6	SF6
59021030	2	6	• Dust Cover	
59021031	3	1	• Dust Cover	
59021025	4	1	• Connector Support	

© 2025 Jost