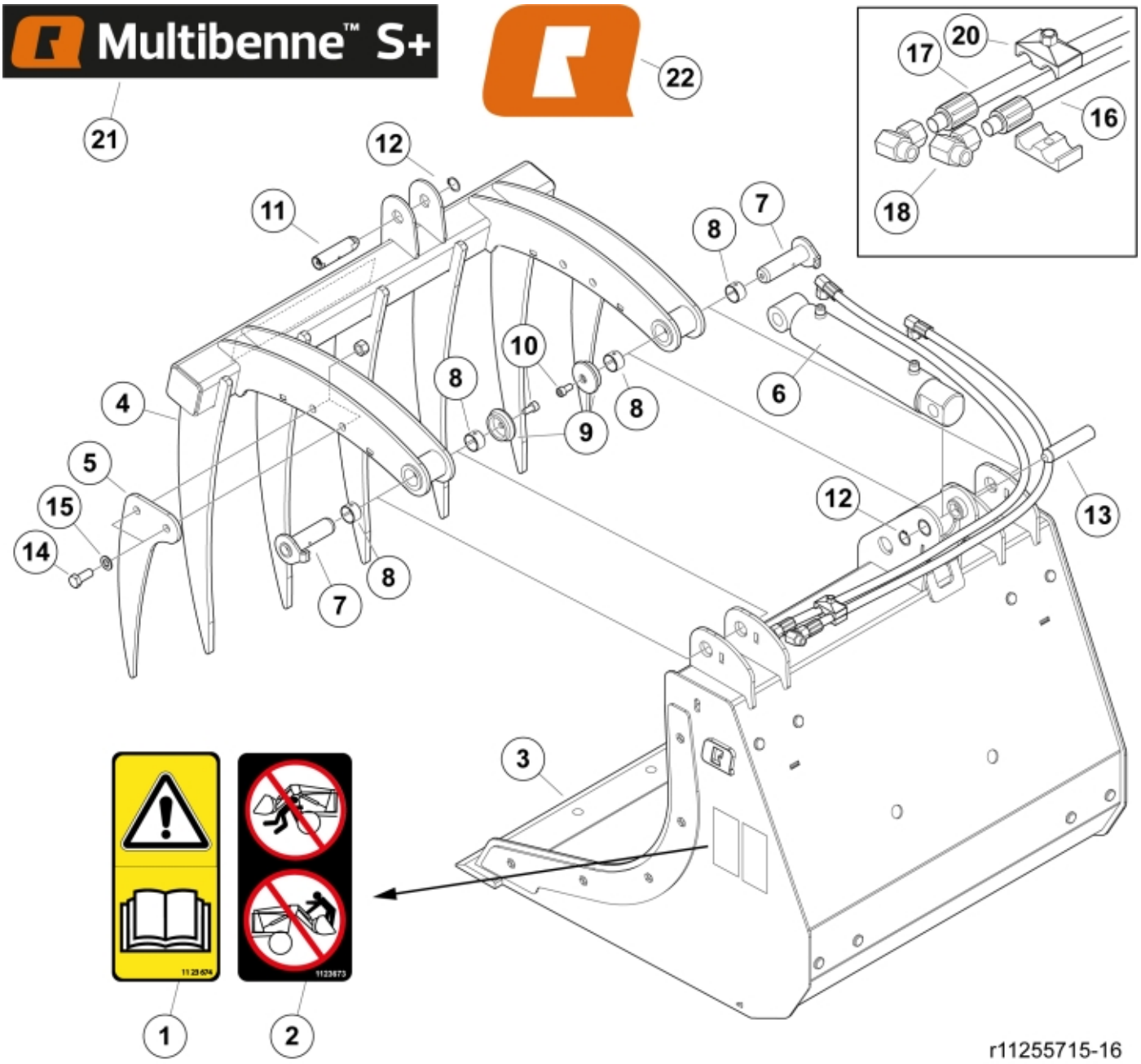
Multibenne™ S+
21
22
12
11
7
8
10
8
9
8
6
4
5
15
14
7
8
12
13
3
17
20
16
18
1
2
r11255715-16

© 2025 Jost

Part assemblies	Multibenne S+ 90
Specification	Year From: 8/1/2020 12:00:00 AM

PartNo	Pos	Qty	Name	Specifications
11255715		1	Multibenne S+ 90	8/1/2020 12:00:00 AM
1123674	1	1	Warning decal	"Read manual"
1123673	2	1	Warning decal	
60046400	3	1	Cutting edge	90
60051290	4	5	Tine	
11260312-22	5	2	Side tine	
60110582-1	6	1	Cylinder	Glossy Black, 12/10/2025 12:00:00 AM
9020110	7	2	Pivot Pin	D=30, L=105mm
5018515	8	4	Bushing	D30 L=20
5215131	9	2	Locking cover	
5004917	10	2	Screw	
60053050	11	1	Pin	
5050817	12	2	Circlip	
60051551	13	1	Pin	
5002127	14	4	Screw	M6S M14 x 35
5013107	15	4	Washer	BRB 15 x 26 x 2
60057816		1	Hose kit	
60057846	16	1	• Hose	3/8" L=540 3/8G90LMC 3/8GRU
60057847	17	1	• Hose	3/8" L=795 3/8G90LMC 3/8GRU
1120099	18	2	Adaptor	3/8" BSP 90°
5016968	20	1	Hose clamp	
60051752	21	1 PCS	Decal	Multibenne S+
60056626	22	2	Decal	
5022119		2	Plug	

© 2025 Jost