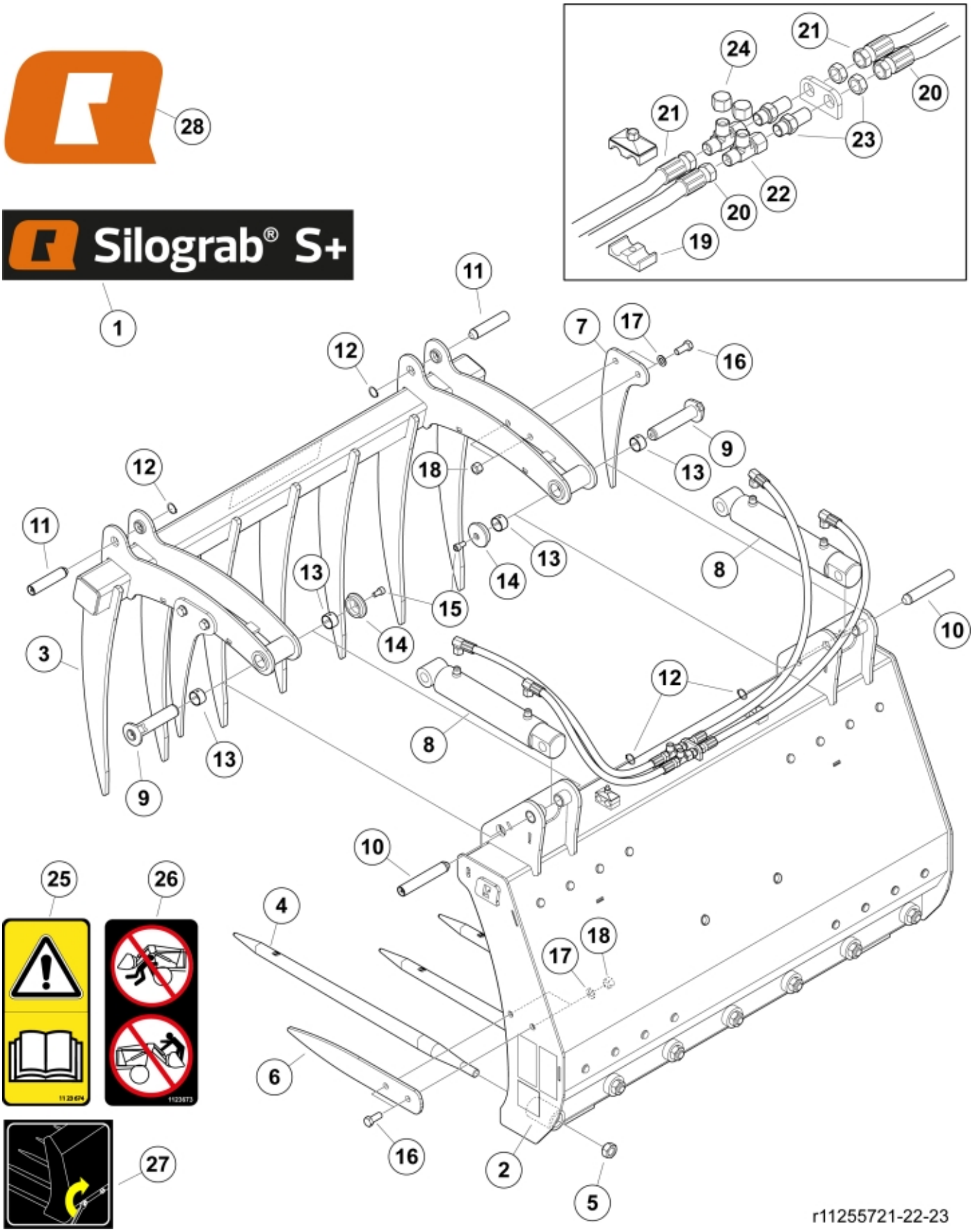

© 2025 Jost

Part assemblies	Silograb S+ 110
Specification	Year From: 9/1/2020 12:00:00 AM
	Year To: 1/15/2026 12:00:00 AM

PartNo	Pos	Qty	Name	Specifications
11255721		1	Silograb S+ 110	9/1/2020 12:00:00 AM, 1/15/2026 12:00:00 AM
60051753	1	1	Decal	Silograb S+
9010121	2	6	Sleeve	Conus 1
60051290	3	6	Tine	
5068109-17	4	6	Tine with nut	L=820mm (replaces 5068101)
5068111	5	1	• Nut	Conus 1
11260256-22	6	2	Side tine	
11260312-22	7	2	Side tine	
60110582-1	8	1	Cylinder	Glossy Black, 12/10/2025 12:00:00 AM
60019853	9	2	Pin	D=30 L=141 (replaces 5220060)
60051537	10	2	Pin	
60051551	11	2	Pin	
5050817	12	4	Circlip	
5018515	13	4	Bushing	D30 L=20
5215131	14	2	Locking cover	
5004917	15	2	Screw	
5002127	16	8	Screw	M6S M14 x 35
5013107	17	8	Washer	BRB 15 x 26 x 2
5011556	18	8	Nut	M14
5016968	19	2	Hose clamp	
60051801	20	2	Hose	3/8" L=865 3/8G90LM 3/8GRLM
60051800	21	2	Hose	3/8" L=640 3/8G90LM 3/8GRLM
5027454	22	2	L-coupling	
5027960	23	2	Adaptor	R3/8"
5026626	24	2	Plastic cover	
1123674	25	1	Warning decal	"Read manual"
1123673	26	1	Warning decal	
11136517	27	1	Warning decal	"Tightening of tine"
60056626	28	2	Decal	
5022119		2	Plug	

© 2025 Jost