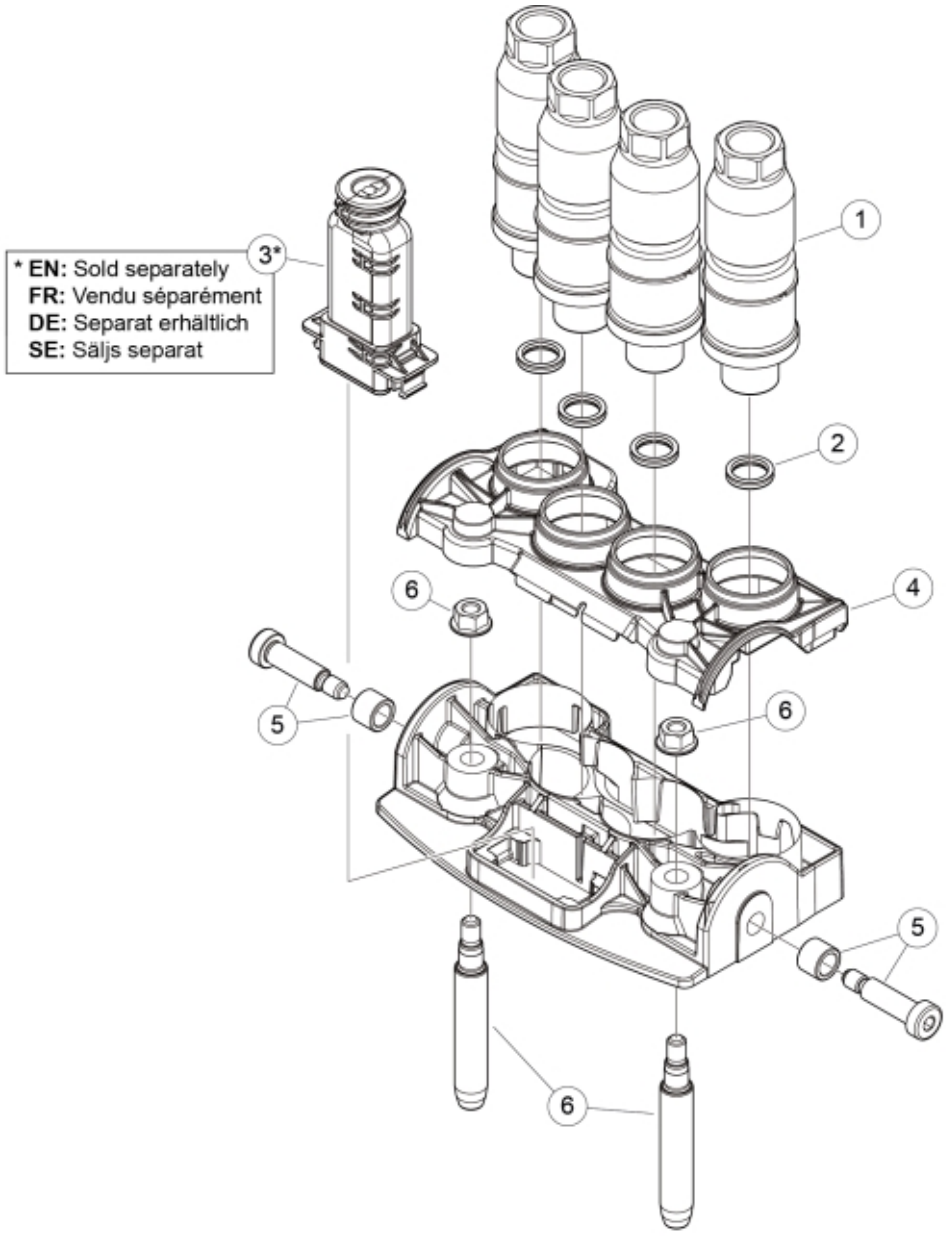
* EN: Sold separately
FR: Vendu séparément
DE: Separat erhältlich
SE: Säljs separat
3*
1
2
4
6
5
6
5
6
r59020490

© 2025 Jost

Description	QCS
Part assemblies	QC4 Mobile

PartNo	Pos	Qty	Name	Specifications
59021046	1	4	Coupling - male	
59021047	2	1	Seal kit	Supplied in bags of 10 pcs
59021020	3	1	Connector handle	Sold Separately
59021061	4	1	Cover	
59021048	5	1	Screw kit	
59021049	6	1	Dowel kit	

© 2025 Jost