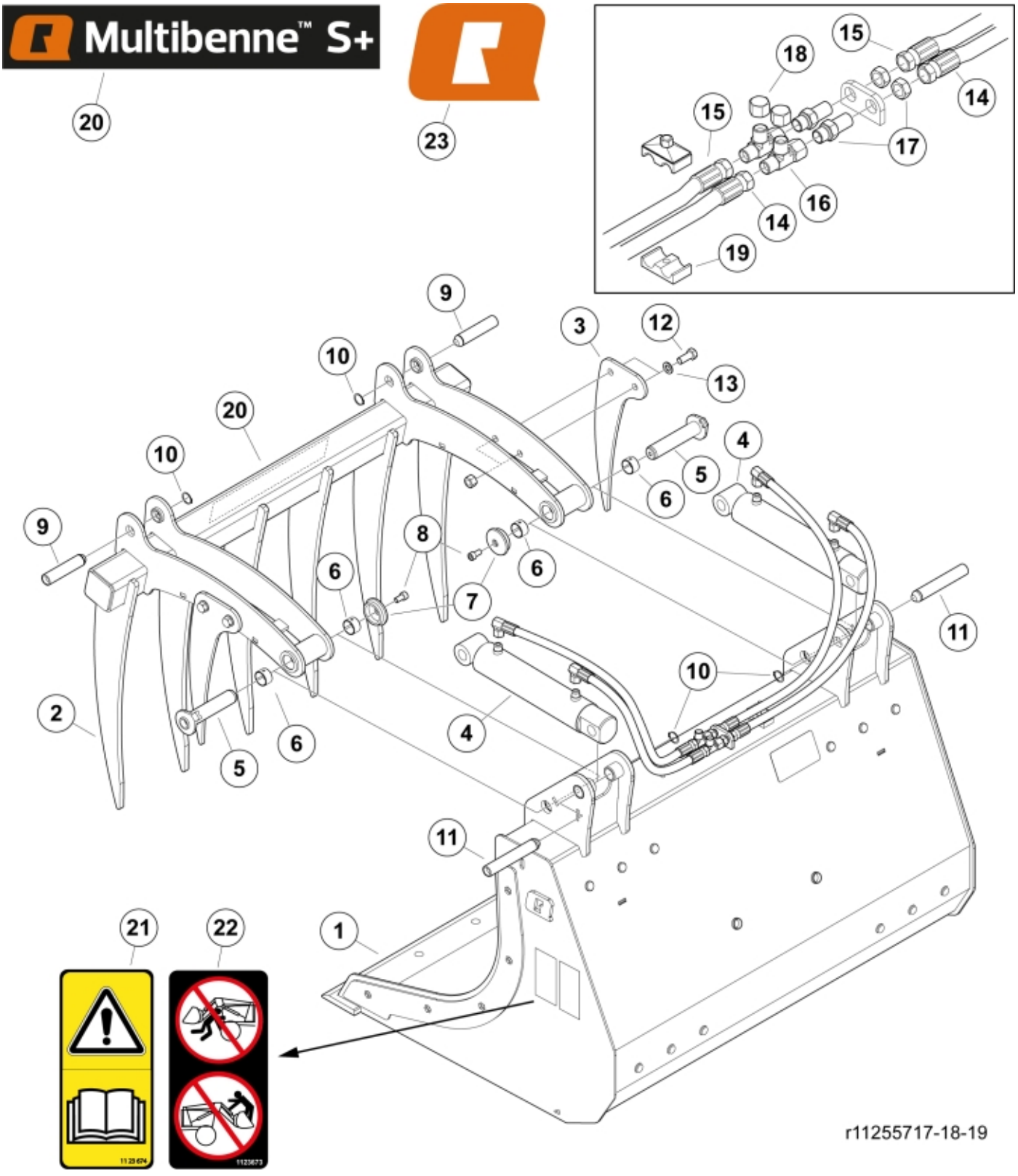
Multibenne™ S+
20
23
15
18
14
15
17
16
14
19
9
3
12
10
13
20
4
10
5
6
9
8
6
6
7
11
10
2
4
6
5
11
1
21
22
r11255717-18-19

© 2025 Jost

Part assemblies	Multibenne S+ 160
Specification	Year From: 8/1/2020 12:00:00 AM

PartNo	Pos	Qty	Name	Specifications
11255719		1	Multibenne S+ 160	8/1/2020 12:00:00 AM
60046622	1	1	Cutting edge	160
60051290	2	8	Tine	
11260312-22	3	2	Side tine	
60110582-1	4	1	Cylinder	Glossy Black, 12/10/2025 12:00:00 AM
60019853	5	2	Pin	D=30 L=141 (replaces 5220060)
5018515	6	4	Bushing	D30 L=20
5215131	7	2	Locking cover	
5004917	8	2	Screw	
60051551	9	2	Pin	
5050817	10	4	Circlip	
60051537	11	2	Pin	
5002127	12	4	Screw	M6S M14 x 35
5013107	13	4	Washer	BRB 15 x 26 x 2
60051558		1 PCS	Hose kit	
60051559	14	2	• Hose	3/8" L=833 3/8G90LMC 3/8GRLM
60051576	15	2	• Hose	3/8" L=1072 3/8G90LMC 3/8GRLM
5027454	16	2	L-coupling	
5027960	17	2	Adaptor	R3/8"
5026626	18	2	Plastic cover	
5016968	19	2	Hose clamp	
60051752	20	1 PCS	Decal	Multibenne S+
1123674	21	1	Warning decal	"Read manual"
1123673	22	1	Warning decal	
60056626	23	2	Decal	
5022119		2	Plug	

© 2025 Jost