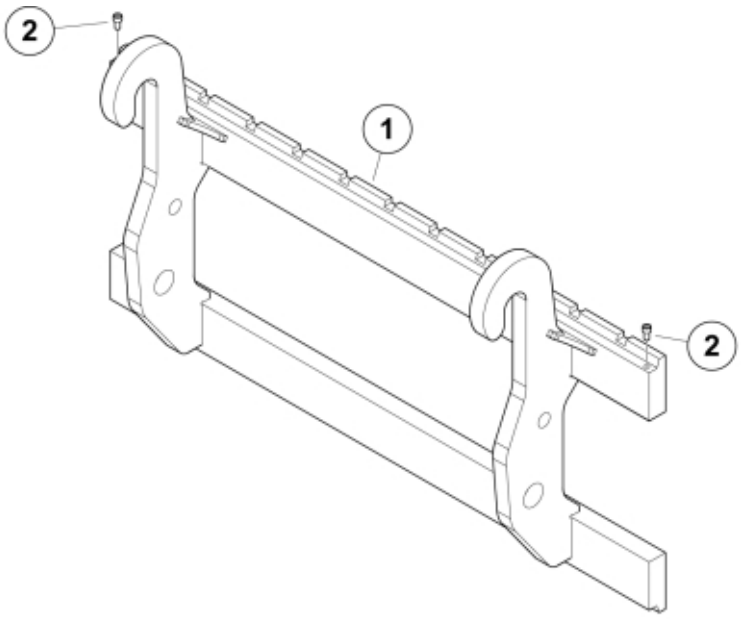

M 11255708

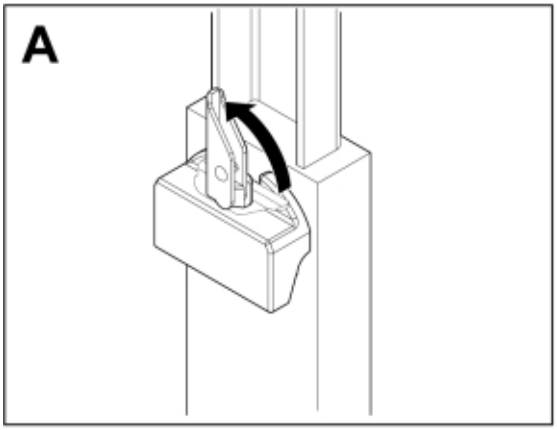

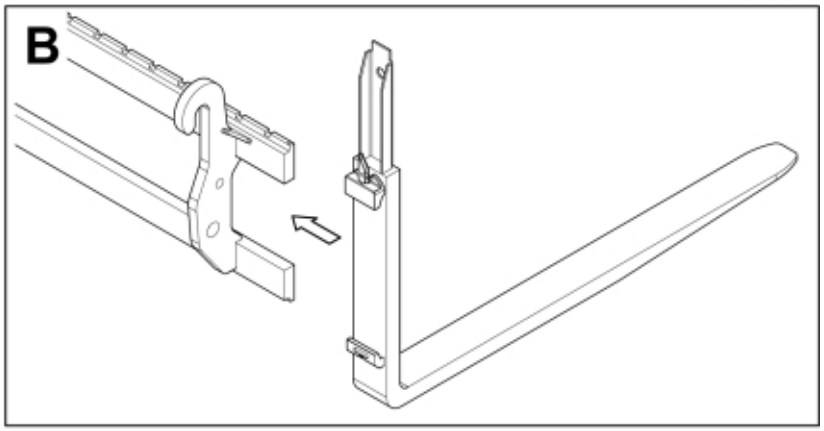

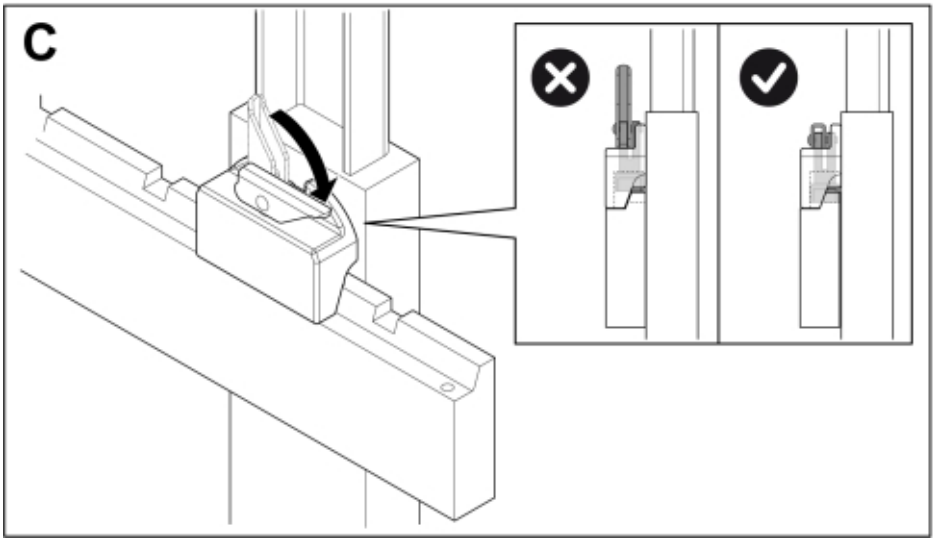

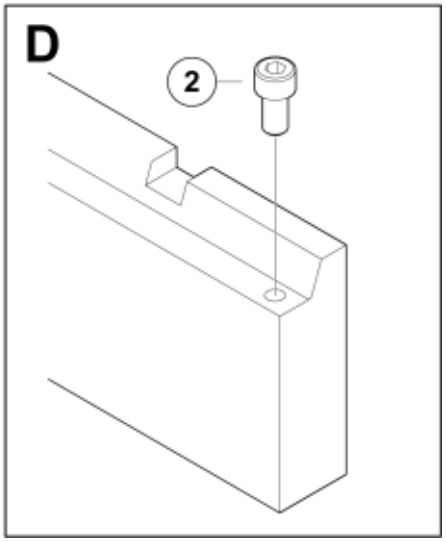

© 2025 Jost

Part assemblies	Pallet fork S - Weidemann
Specification	Year From: 10/1/2020 12:00:00 AM

PartNo	Pos	Qty	Name	Specifications
11255708	1	1	Pallet fork S - Weidemann	10/1/2020 12:00:00 AM
5004919	2	2	Screw	MC6S M8x16

© 2025 Jost