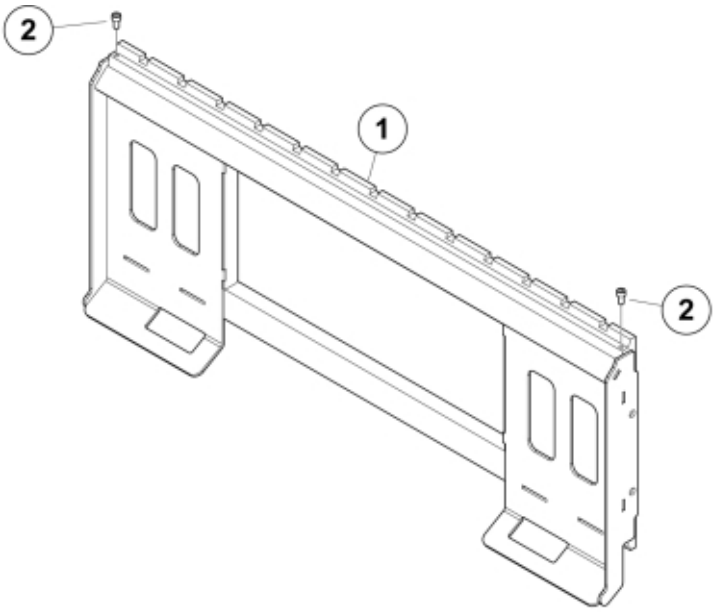

M 11255822

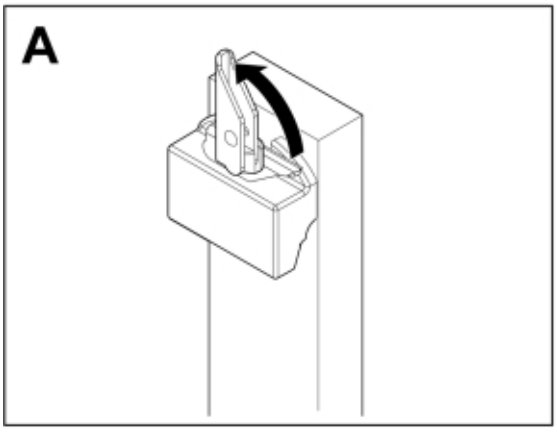

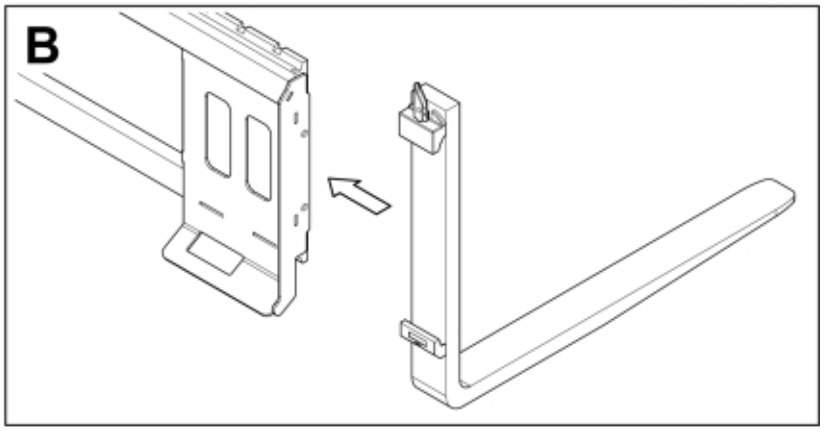

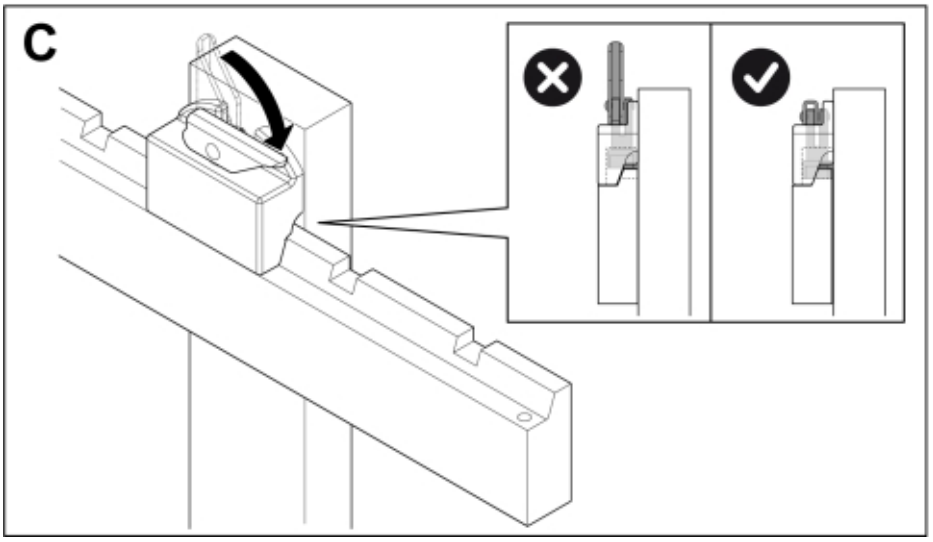

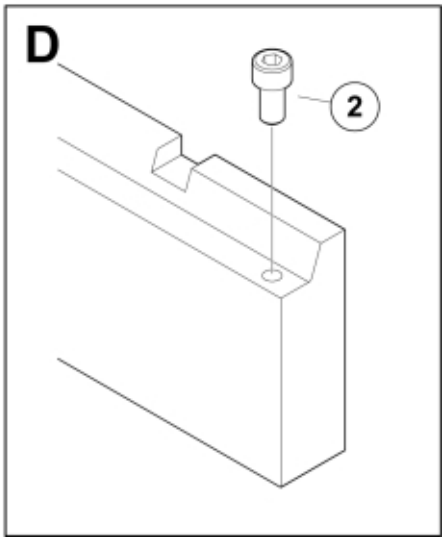

© 2025 Jost

Part assemblies	Pallet fork C - Skidsteer
Specification	Year From: 10/1/2020 12:00:00 AM

PartNo	Pos	Qty	Name	Specifications
11255822	1	1	Pallet fork C - Skidsteer	10/1/2020 12:00:00 AM
5004919	2	2	Screw	MC6S M8x16

© 2025 Jost