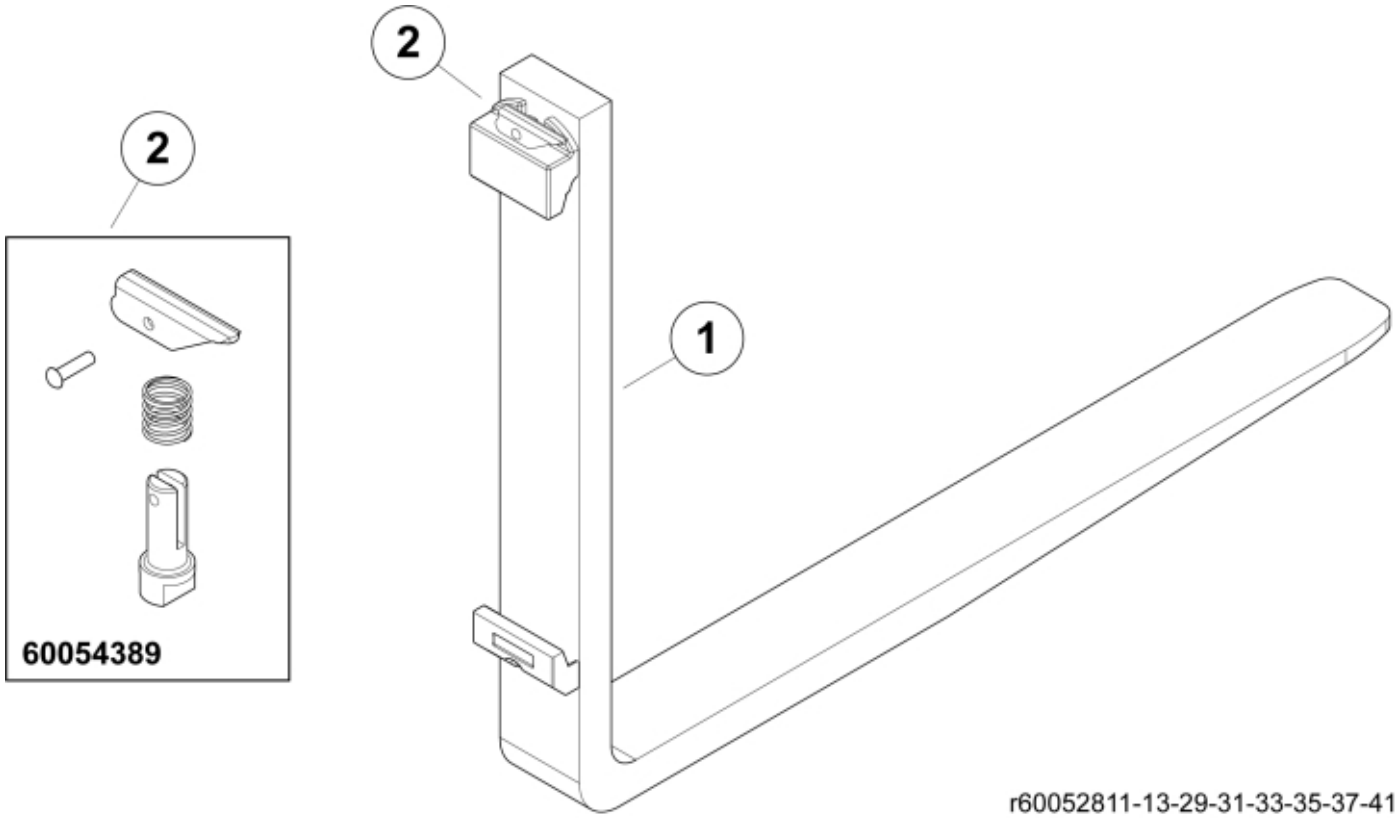

r60052811-13-29-31-33-35-37-41
r60054006

© 2025 Jost

Description	L=1060 400kg
Part assemblies	Fork

PartNo	Pos	Qty	Name	Specifications
60052841	1	1 PCS	Fork	
60054389	2	1	Locking mechanism	

© 2025 Jost