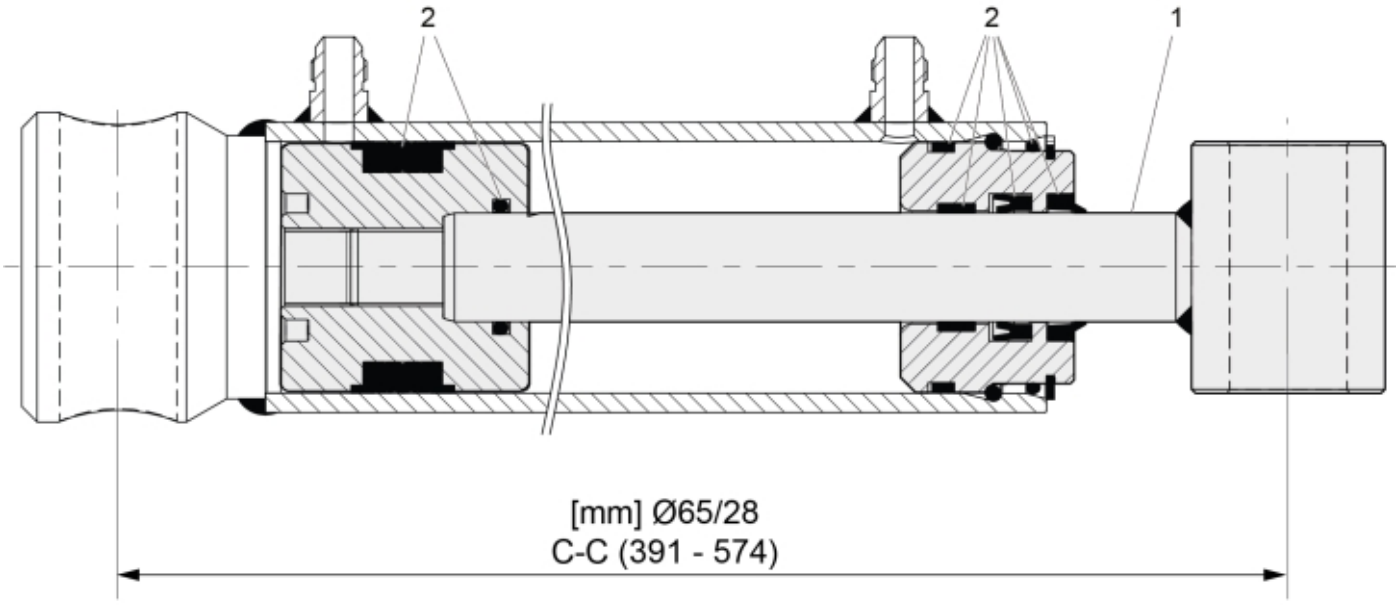

r60047568

© 2025 Jost

Description	65/28
Part assemblies	Cylinder

PartNo	Pos	Qty	Name	Specifications
60056952	1	1	Piston rod cpl.	
60057740	2	1	Seal kit	

© 2025 Jost