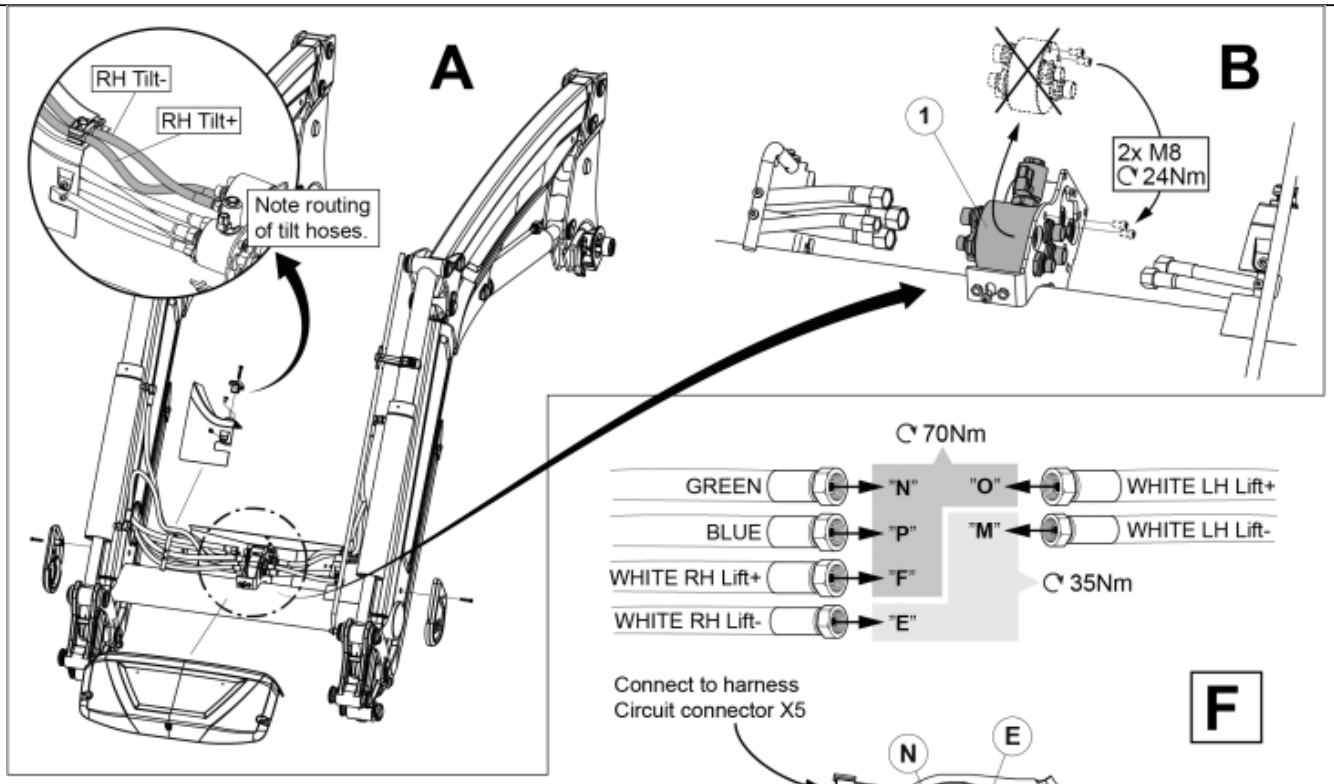

M 60053831_832_833-1

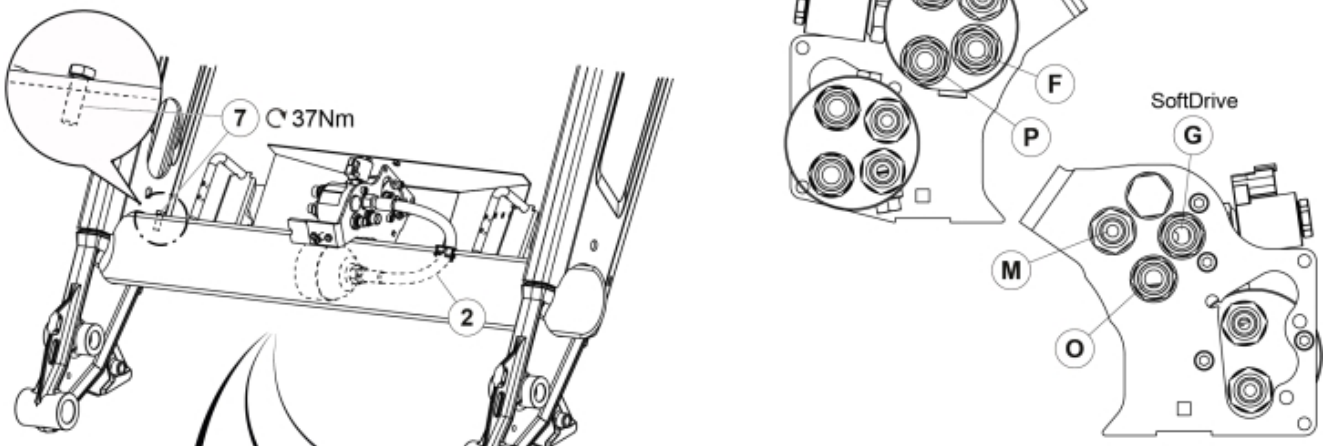

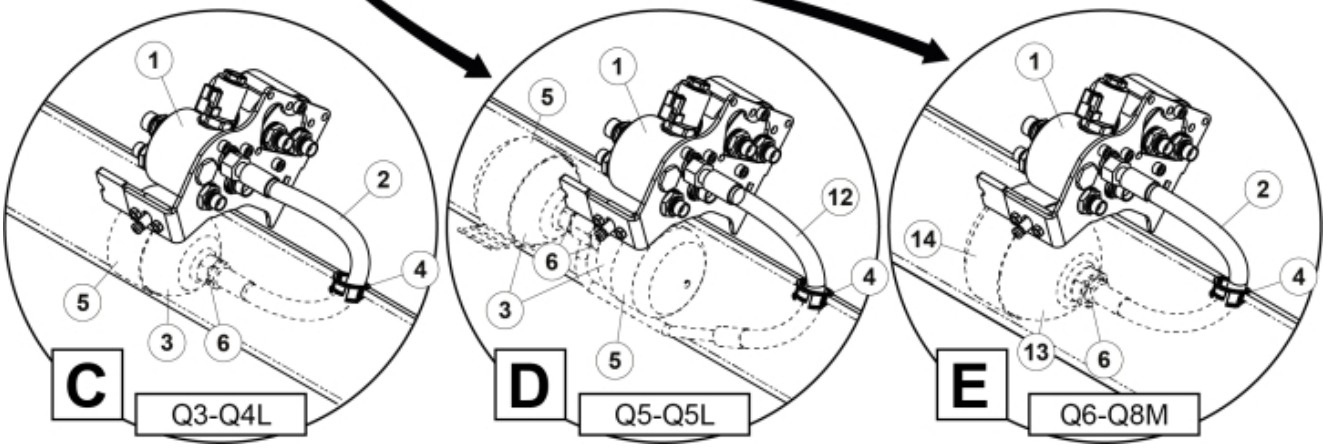

© 2025 Jost

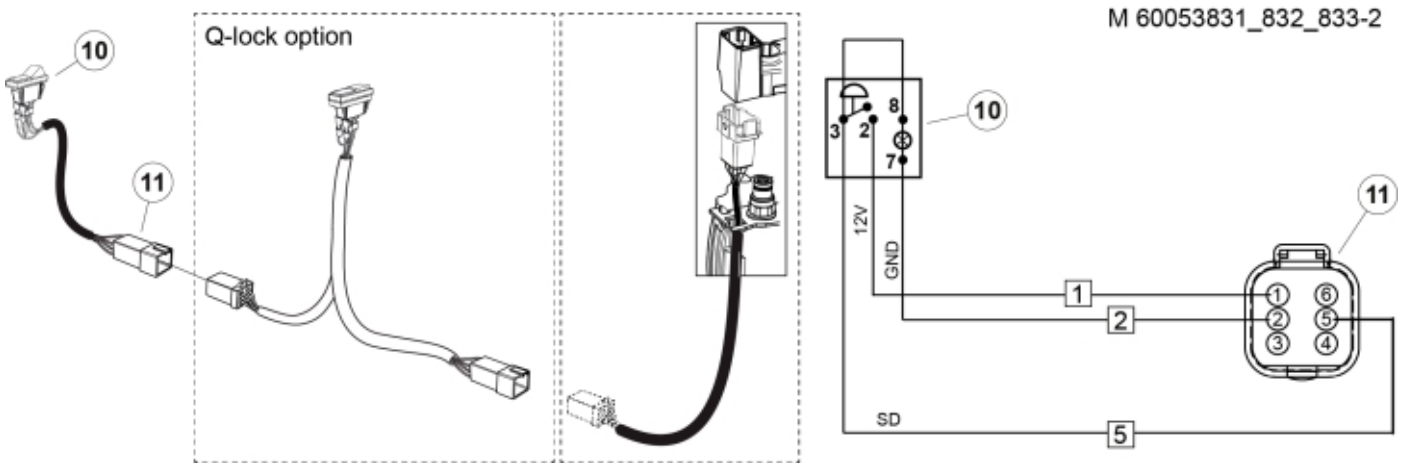
Q-lock option
10
11
M 60053831_832_833-2
10
3
2
8
7
11
12V
GND
1
2
SD
5
1
2
3
6
5
4

© 2025 Jost

Part assemblies		SoftDrive cpl.		
Specification		Specification: Q3-Q4L		
PartNo	**Pos**	**Qty**	**Name**	**Specifications**
60053831		1 PCS	SoftDrive cpl.	Q3-Q4L
60050231		1	SoftDrive kit Plus	Replaces 60019601
4501145	1	1	• Block cpl	Lift, Replaces 4500131, 5/1/2019 12:00:00 AM
60005564	2	1	• Hose	1/2" L=400
5033773	3	1	• Accumulator	0,5L/22Bar
60008713	4	1	• Edge cover	
5215012	5	1	• Bracket	
5013853	6	1	• Dowty washer	Tredo 1/2", Part is included in kit 60007907 Hose cpl., 9032177 Hose cpl.
5002077	7	1	• Screw	M6S 10x30
5101074	10	1	Switch	
5101084	11	1	Connector, female	Deutsch 6-pol.

© 2025 Jost