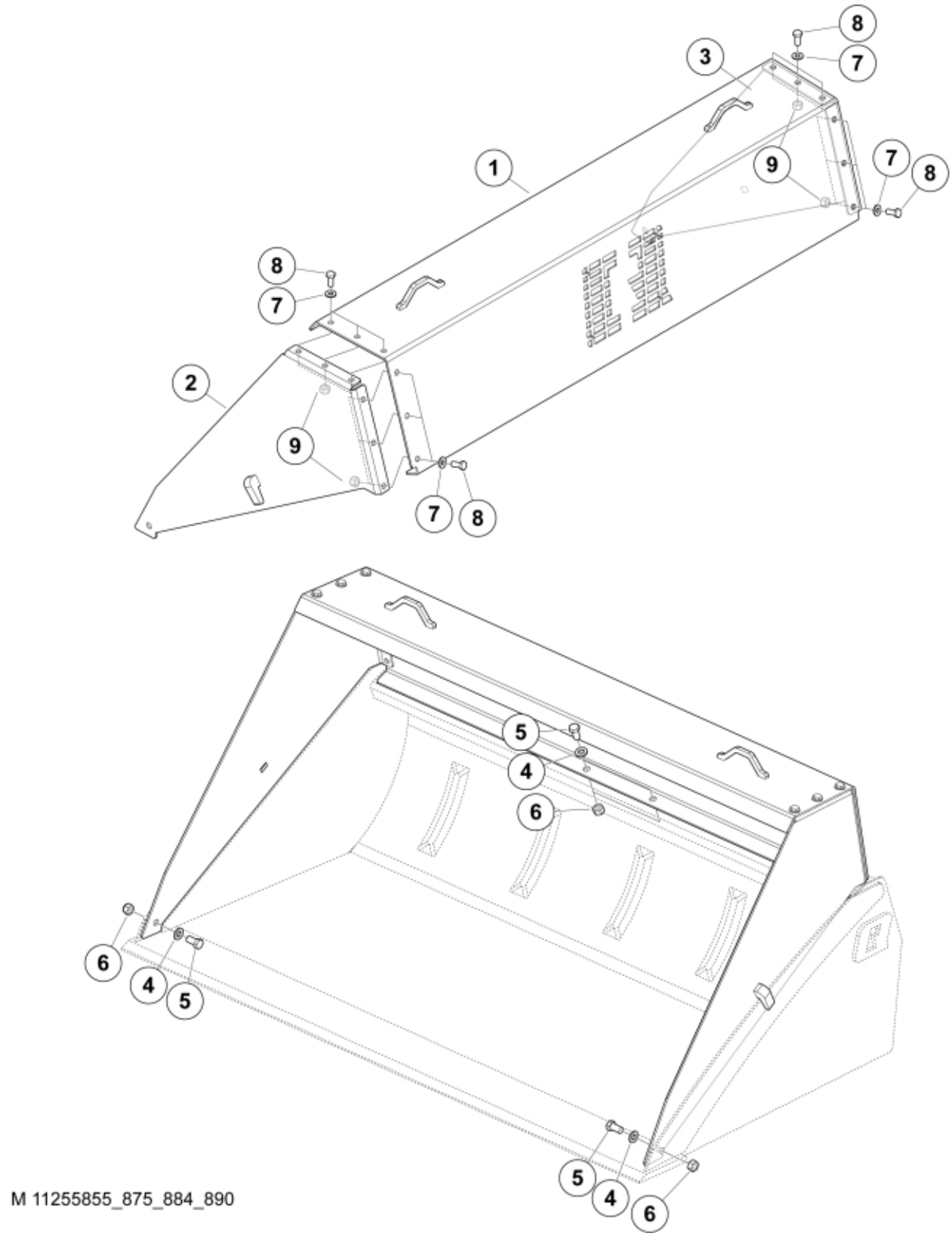

M 11255855_875_884_890

© 2025 Jost

Part assemblies Extension kit S 140

PartNo	Pos	Qty	Name	Specifications
11255884		1	Extension kit S 140	
60055133	1	1 PCS	Plate	
60054469	2	1 PCS	Gable LH	
60054470	3	1 PCS	Gable RH	
60054629		1 PCS	Screw kit	
5013104	4	4	• Washer	13.5 x 24 x 2
5002101	5	4	• Screw	M6S M12 x 25 (8.8)
5011911	6	4	• Nut	M12
5013110	7	12	• Washer	BRB 10.5x22x2
5002089	8	12	• Screw	M6S 10 x 25
5011554	9	12	• Nut	Loc-King M10

© 2025 Jost