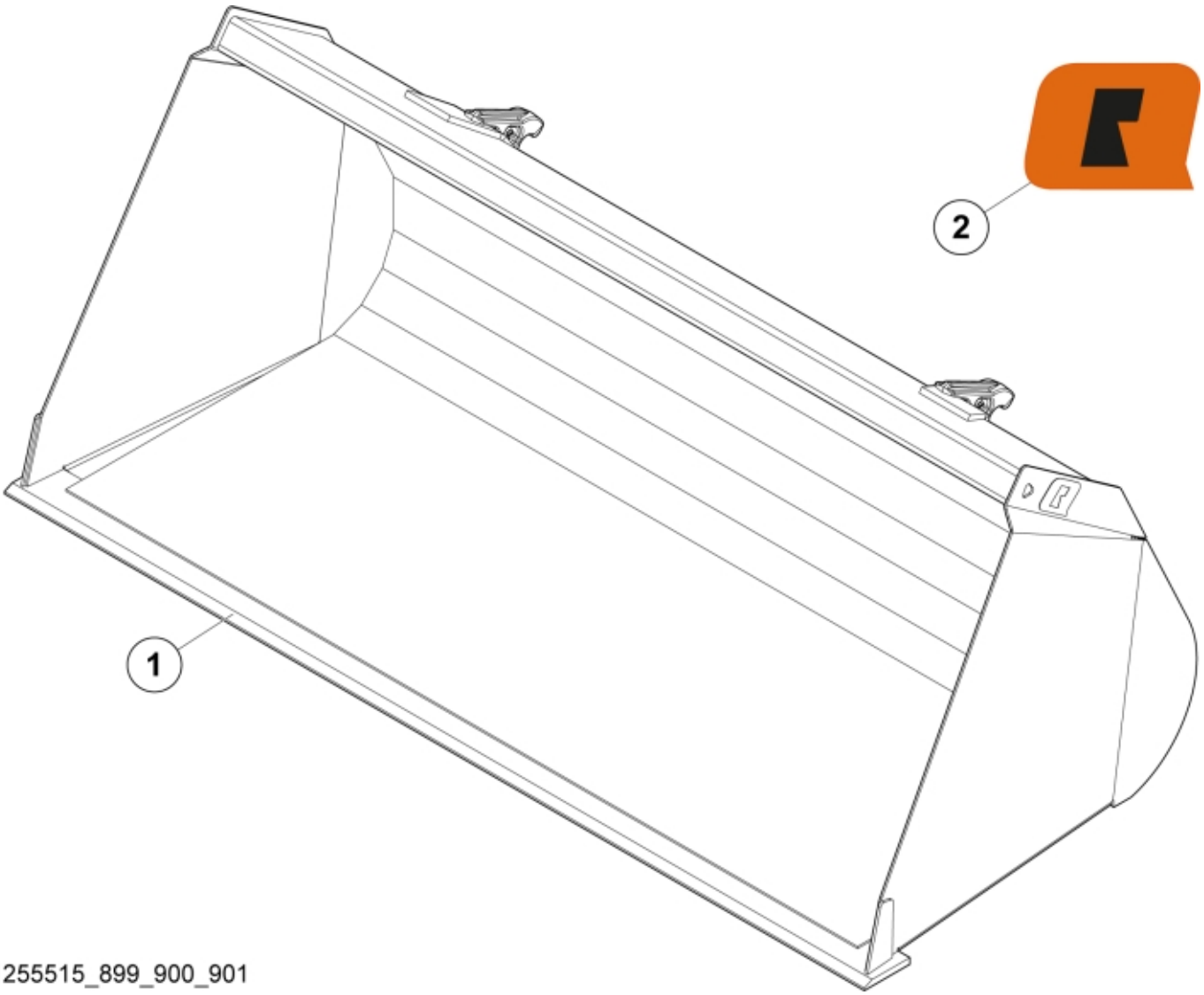

r11255515_899_900_901

© 2025 Jost

Part assemblies	Bucket GS 185 SMS
Specification	Year From: 9/1/2020 12:00:00 AM

PartNo	Pos	Qty	Name	Specifications
11255901		1	Bucket GS 185 SMS	9/1/2020 12:00:00 AM
11260047	1	1	Cutting edge	
60049053	2	2	Decal	"Q" small 80x57
5022119		2	Plug	

© 2025 Jost