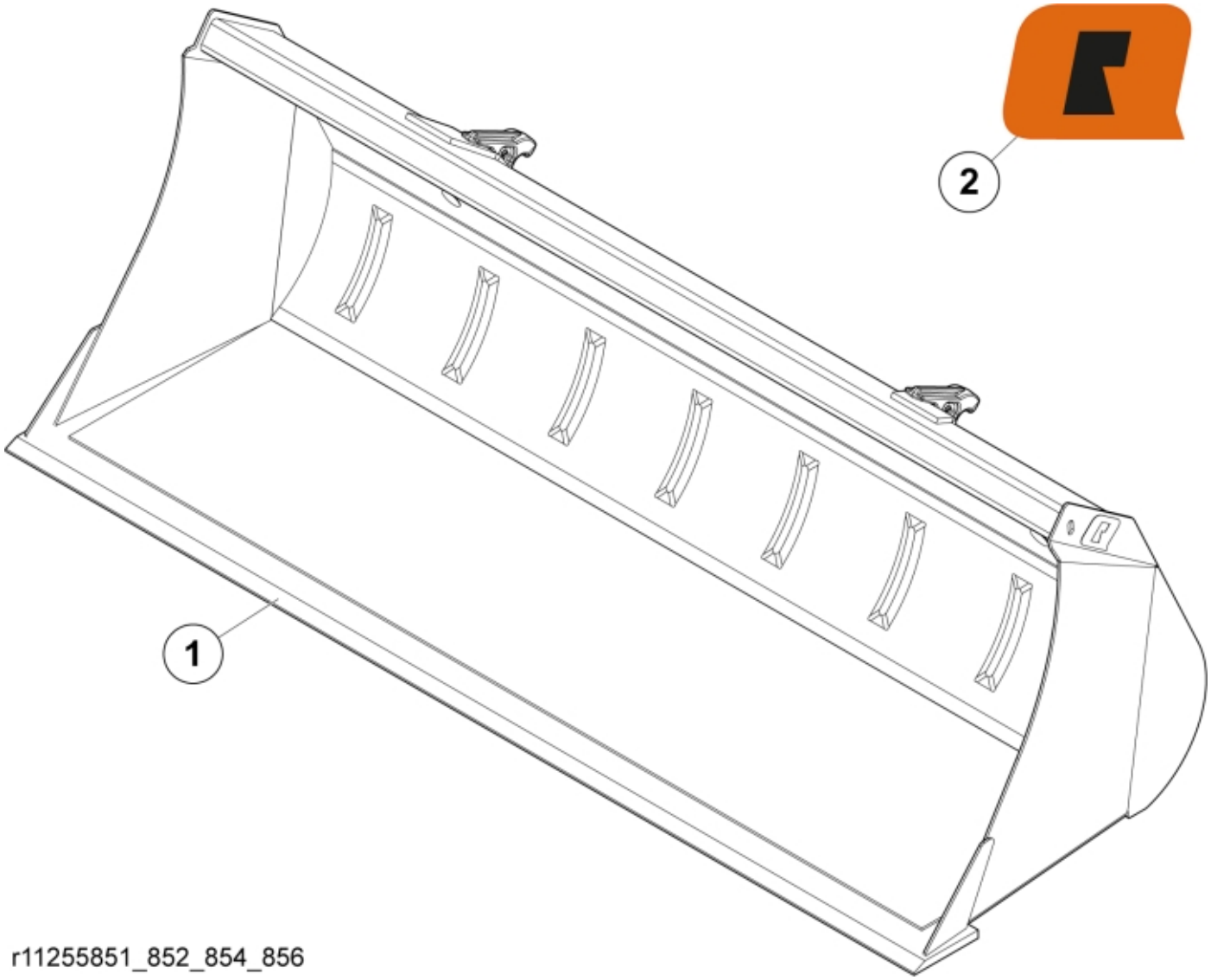

r11255851_852_854_856

© 2025 Jost

Part assemblies	Bucket SM 185 Skidsteer
Specification	Year From: 9/1/2020 12:00:00 AM

PartNo	Pos	Qty	Name	Specifications
11255852		1	Bucket SM 185 Skidsteer	9/1/2020 12:00:00 AM
11260770	1	1	Cutting edge	
60049053	2	2	Decal	"Q" small 80x57
5022119		2	Plug	

© 2025 Jost