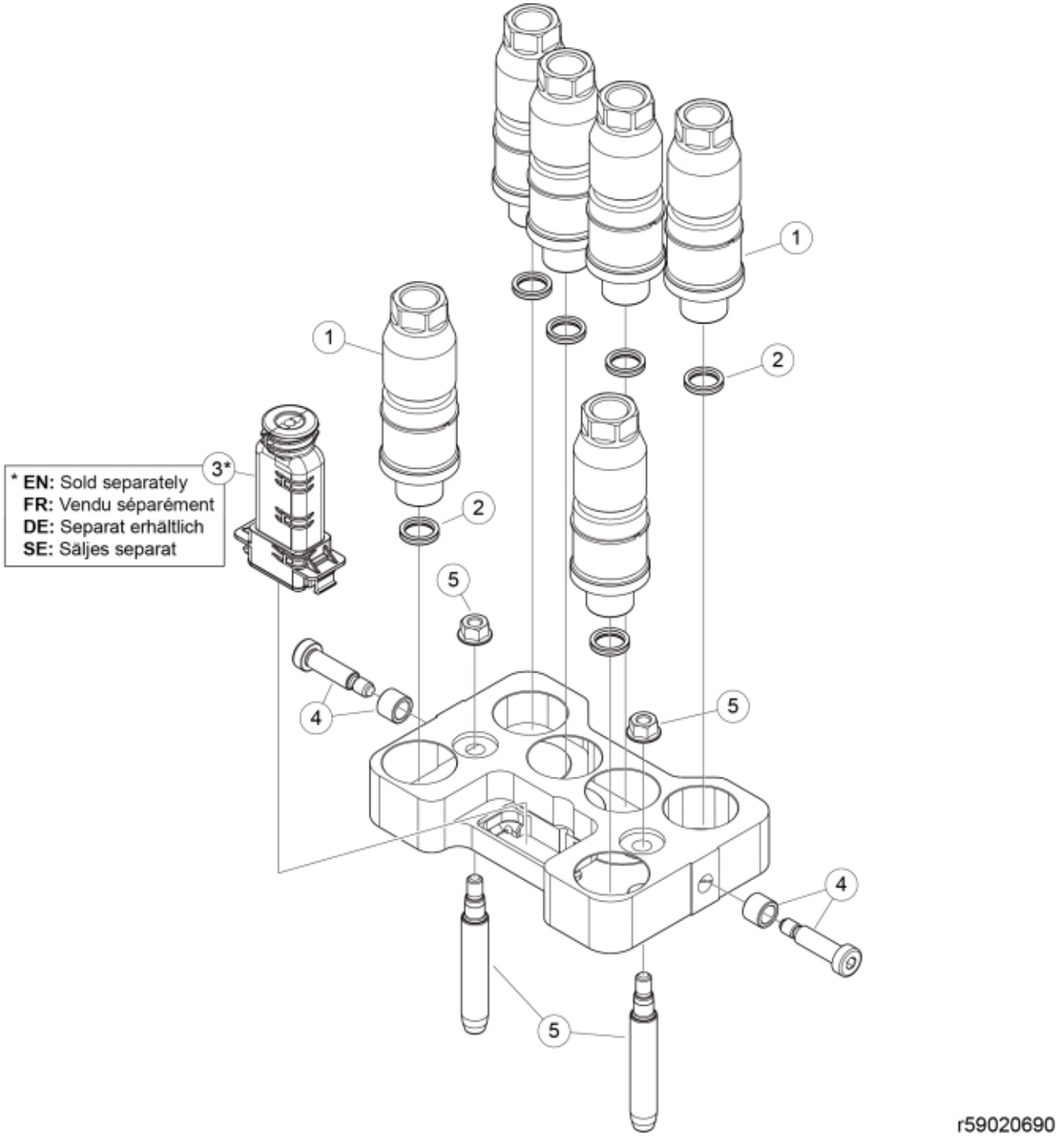
* EN: Sold separately
FR: Vendu séparément
DE: Separat erhältlich
SE: Säljes separat
3*
1
1
2
2
5
5
5
4
4
r59020690

© 2025 Jost

Description	QCS
Part assemblies	QC6c Mobile
Specification	Specification: 1/2"

PartNo	Pos	Qty	Name	Specifications
59021046	1	6	Coupling - male	
59021047	2	1	Seal kit	Supplied in bags of 10 pcs
59021020	3	1	Connector handle	Sold Separately
59021048	4	1	Screw kit	
59021049	5	1	Dowel kit	

© 2025 Jost