r59020450

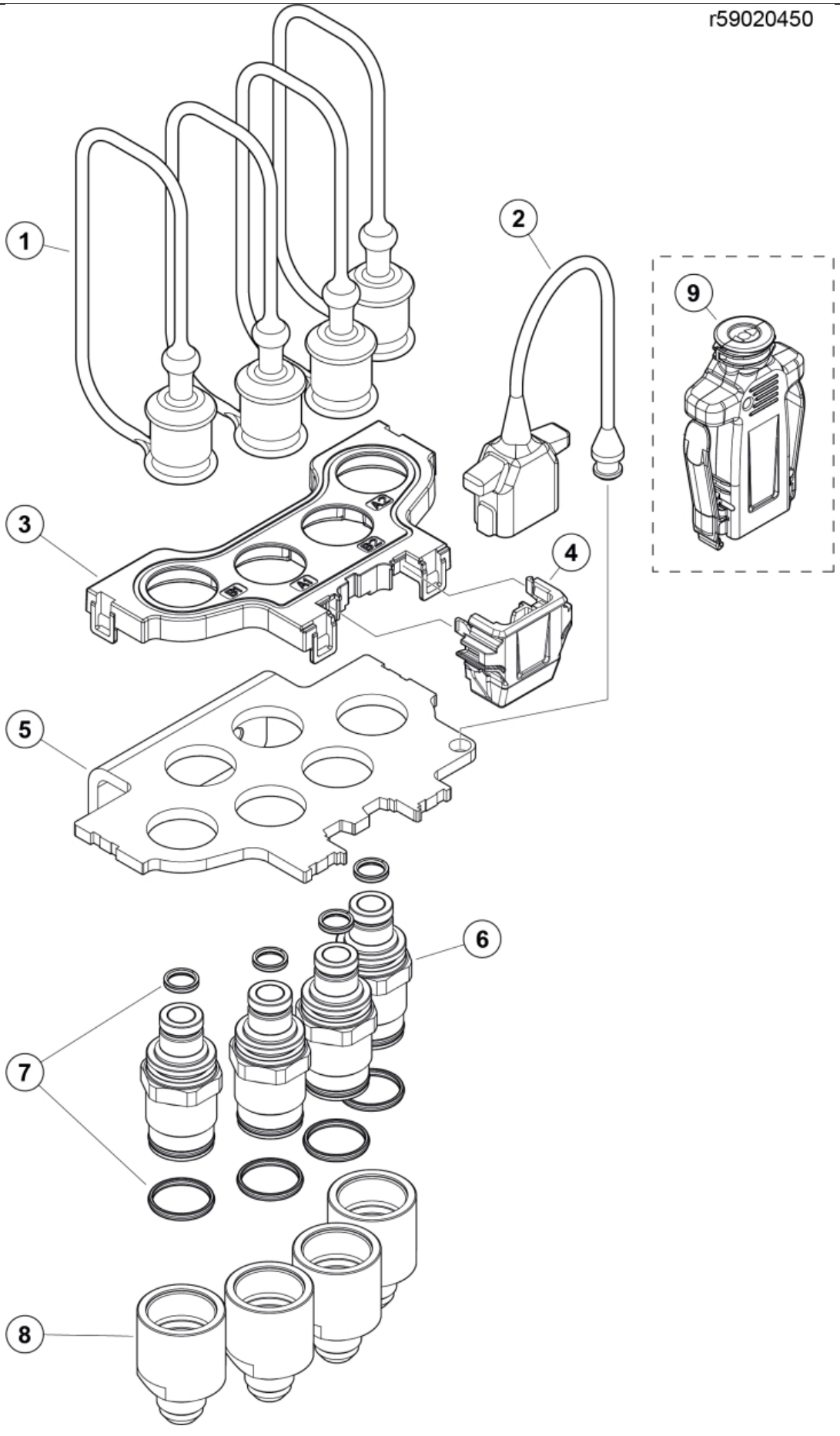

© 2025 Jost

Description	7/8" JIC
Part assemblies	Single coupling base, SF4
Specification	Specification: 7/8" JIC

PartNo	Pos	Qty	Name	Specifications
59021030	1	4	Dust Cover	
59021031	2	1	Dust Cover	
59021024	3	1	Cover	
59021025	4	1	Connector Support	
59021045	5	1	Bracket	
59021040	6	4	Coupling	
59021044	7	1	Seal kit	for coupling/adaptor (supplied in bags of 10)
59021050	8	4	Adaptor	7/8" JIC
59021021	9	1	Connector handle	Sold Separately

© 2025 Jost