r59020650

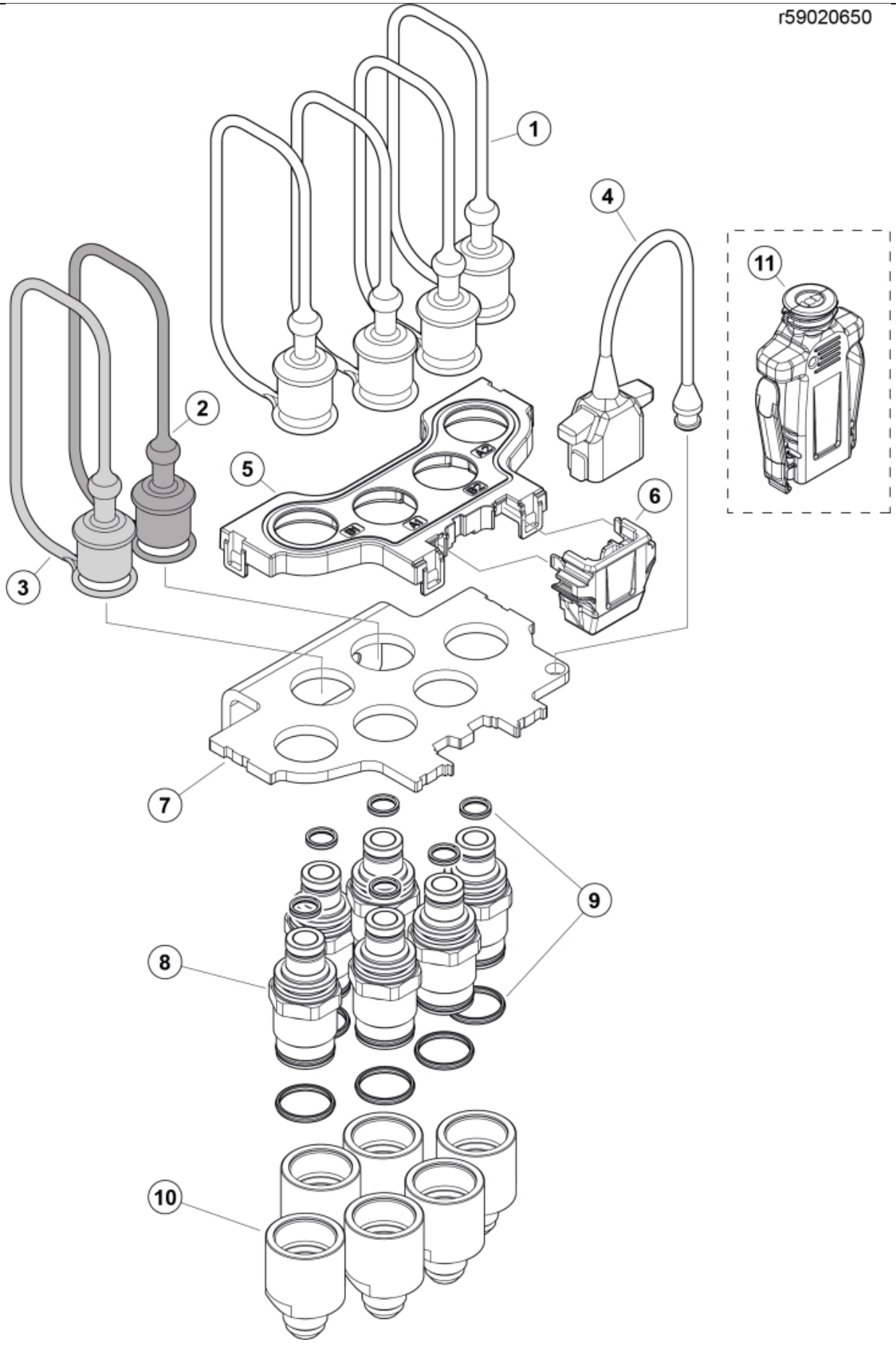

© 2025 Jost

Description	7/8" JIC
Part assemblies	Single coupling base, SF6
Specification	Specification: SF6

PartNo	Pos	Qty	Name	Specifications
59021030	1	4	Dust Cover	
59021029	2	1 PCS	Dust Cover	Blue
59021028	3	1 PCS	Dust Cover	Red
59021031	4	1	Dust Cover	
59021024	5	1	Cover	
59021025	6	1	Connector Support	
59021045	7	1	Bracket	
59021040	8	6	Coupling	
59021044	9	1	Seal kit	for coupling/adaptor (supplied in bags of 10)
59021050	10	6	Adaptor	7/8" JIC
59021021	11	1	Connector handle	Sold Separately

© 2025 Jost