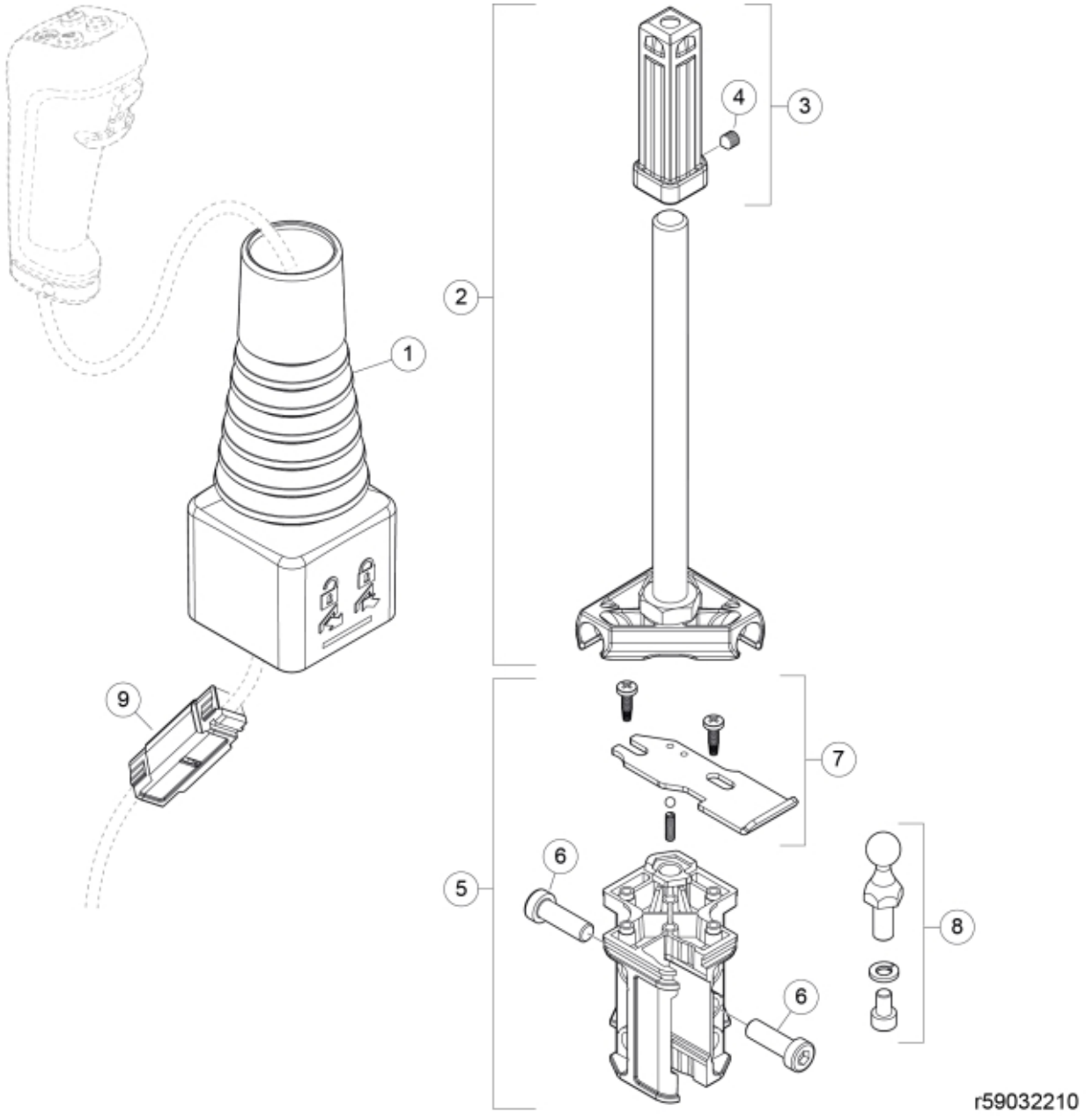

© 2025 Jost

Description	B1
Part assemblies	Control lever
Specification	Specification: Straight lever

PartNo	Pos	Qty	Name	Specifications
59033001	1	1	Gaiter	
59033020	2	1	Lever cpl.	
59033013	3	1	• Pin	
5005446	4	1	•• Stop screw	S6SS M6x6
59033010	5	1	Housing cpl.	
59033015	6	2	• Screw	M8x25
59033011	7	1	• Lock lever kit	
59033012	8	1	• Pivot	
59033016	9	1	Strain relief	

© 2025 Jost