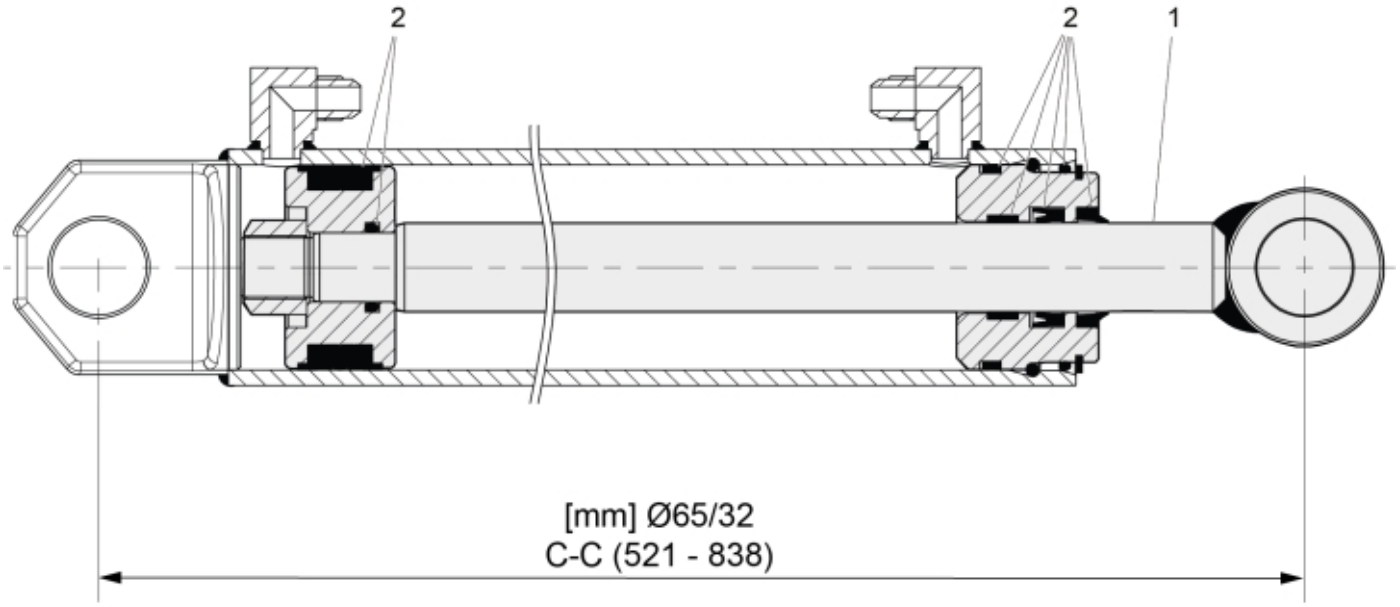

r60057493

© 2025 Jost

Description	65/32
Part assemblies	Cylinder
Specification	Specification: Glossy Black. Replaces 60005431-1,12725210-1

PartNo	Pos	Qty	Name	Specifications
60057716	1	1	Piston rod cpl.	
60048040	2	1	Seal kit	

© 2025 Jost