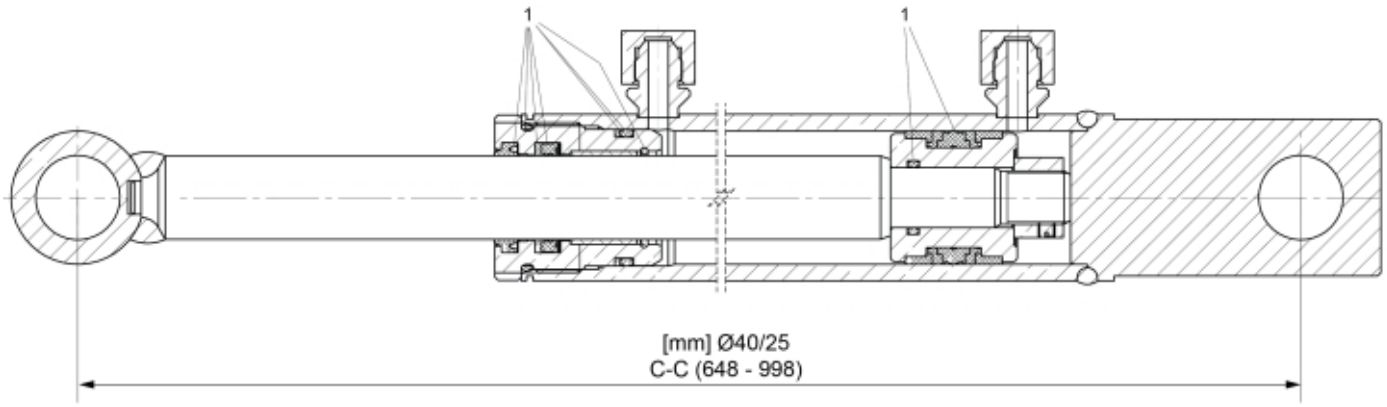

r60022233

© 2025 Jost

Description	40/25
Part assemblies	Lift Cylinder
Specification	Specification: Glossy Black

PartNo	Pos	Qty	Name	Specifications
4501142	1	1	Seal kit	

© 2025 Jost