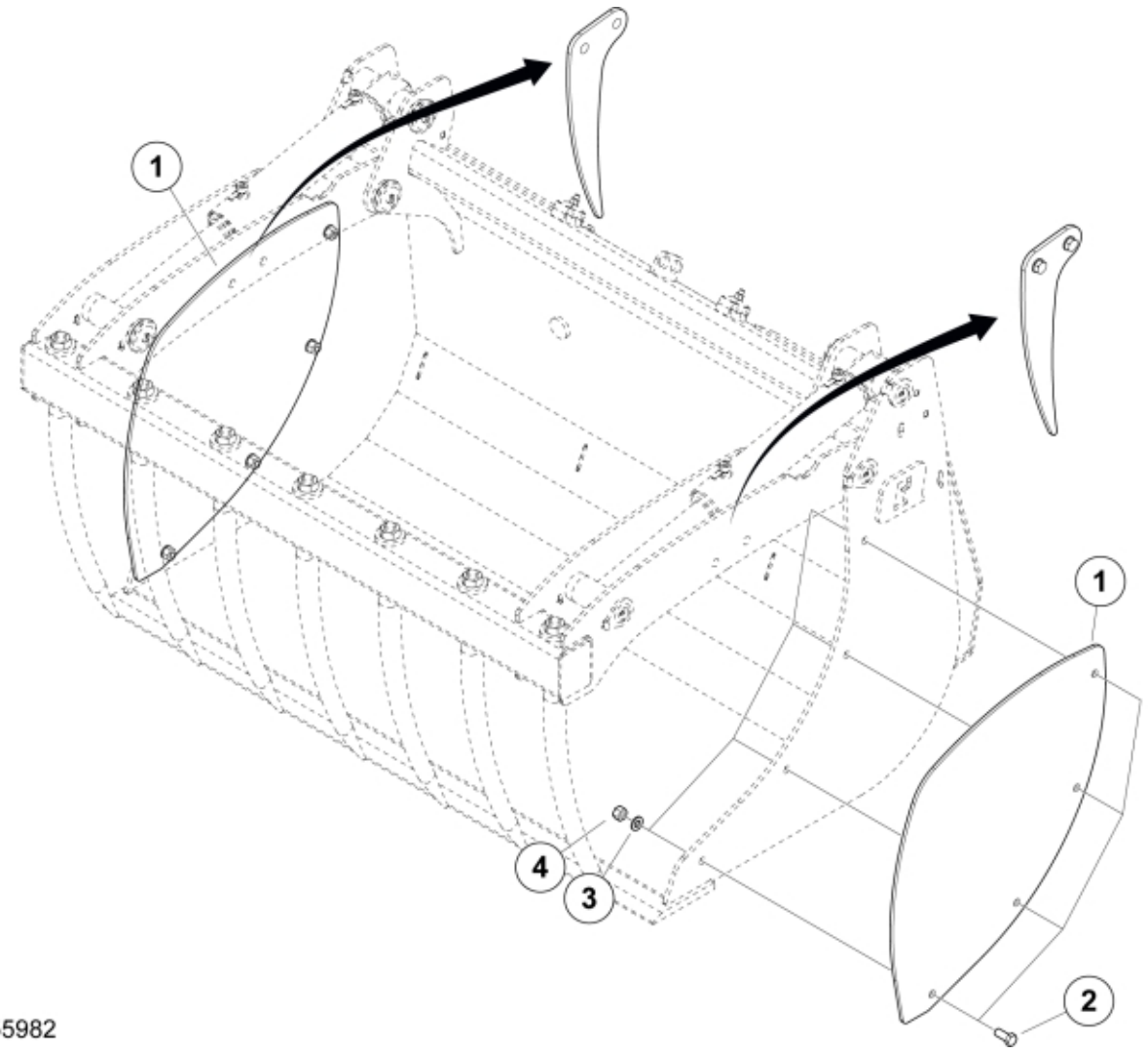

M 11255982

© 2025 Jost

Part assemblies	Bolt on Gable

PartNo	Pos	Qty	Name	Specifications
11255982		1	Bolt on Gable	
60056660-22	1	2 PCS	Plate	
60055143		1 PCS	Screw kit	
5002102	2	8	• Screw	M6S M12X30
5013104	3	8	• Washer	13.5 x 24 x 2
5011555	4	8	• Nut	M12 Loc

© 2025 Jost