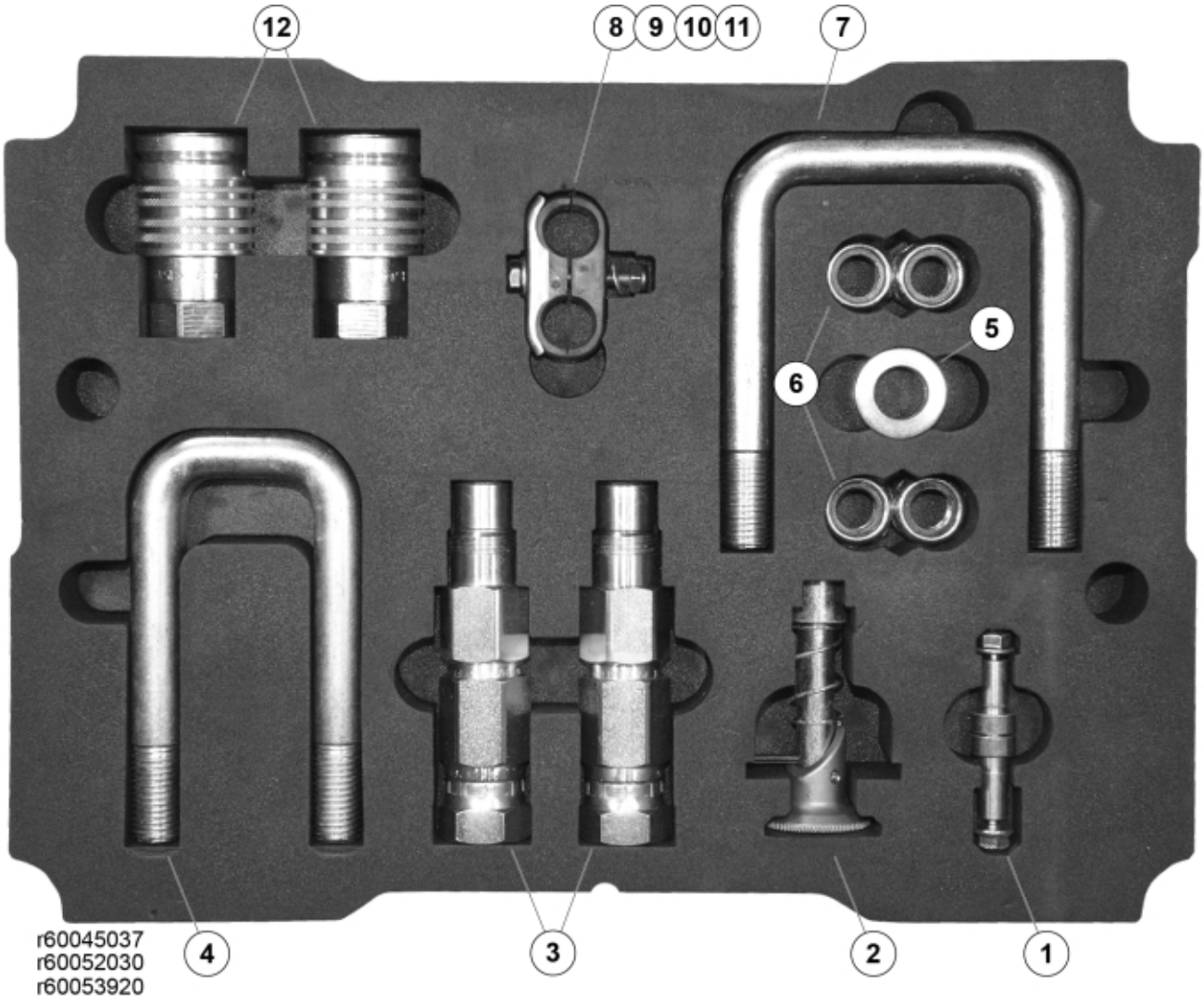

r60045037
r60052030
r60053920

© 2025 Jost

Part assemblies Service suitcase – Implements

PartNo	Pos	Qty	Name	Specifications
60045037		1 PCS	Service suitcase – Implements	
10550205	1	1	Shaft	
11262357	2	1	Locking mechanism	
10550201	3	2	Coupling	
60020468	4	2 PCS	U-bolt	80x40 M16 (60003289)
5013105	5	4	Washer	BRB 17 x 30 x 3 300HV
5011557	6	4	Nut	Loc-King M16
60020469	7	2	U-bolt	80x80 M16 (60003288)
5011553	8	1	Nut	M6M M8 Loc-king
5016968	9	1	Hose clamp	
5013101	10	1	Washer	BRB 8,4 x 16
5002059	11	1	Screw	M6S 8x60
5044127	12	2	Quick Coupling	1/2", Part is included in kit 60007907 Hose cpl., 9032177 Hose cpl.

© 2025 Jost