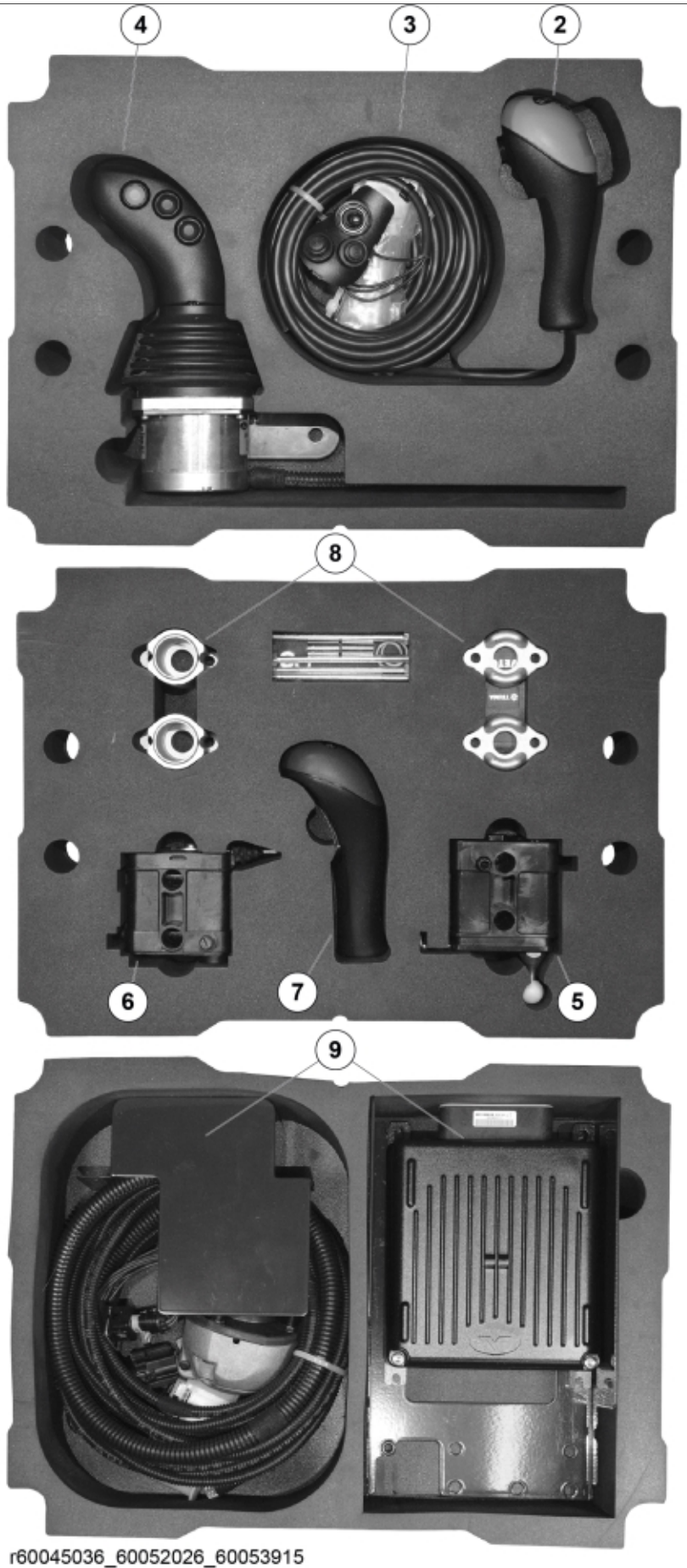

r60045036_60052026_60053915

© 2025 Jost

Part assemblies Service suitcase – Ergodrive & CDC

PartNo	Pos	Qty	Name	Specifications
60045036		1 PCS	Service suitcase – Ergodrive & CDC	
12155016	1	1 PCS	Manual	CDC
5020387	2	1	Electr.Control Device	incl. harness
5020936	3	1	Insert	3 switches
4500759	4	1 PCS	CDC Joystick	Replaces CDC 5101027/26
4500343	5	1	Housing cpl.	
5020382	6	1	Housing	
4500356	7	1	Handle	
313262	8	1 PCS	Mounting Kit	2 pcs
10550562	9	1 PCS	CDC2 Retro Fit kit cpl.	

© 2025 Jost