Silograb® M+

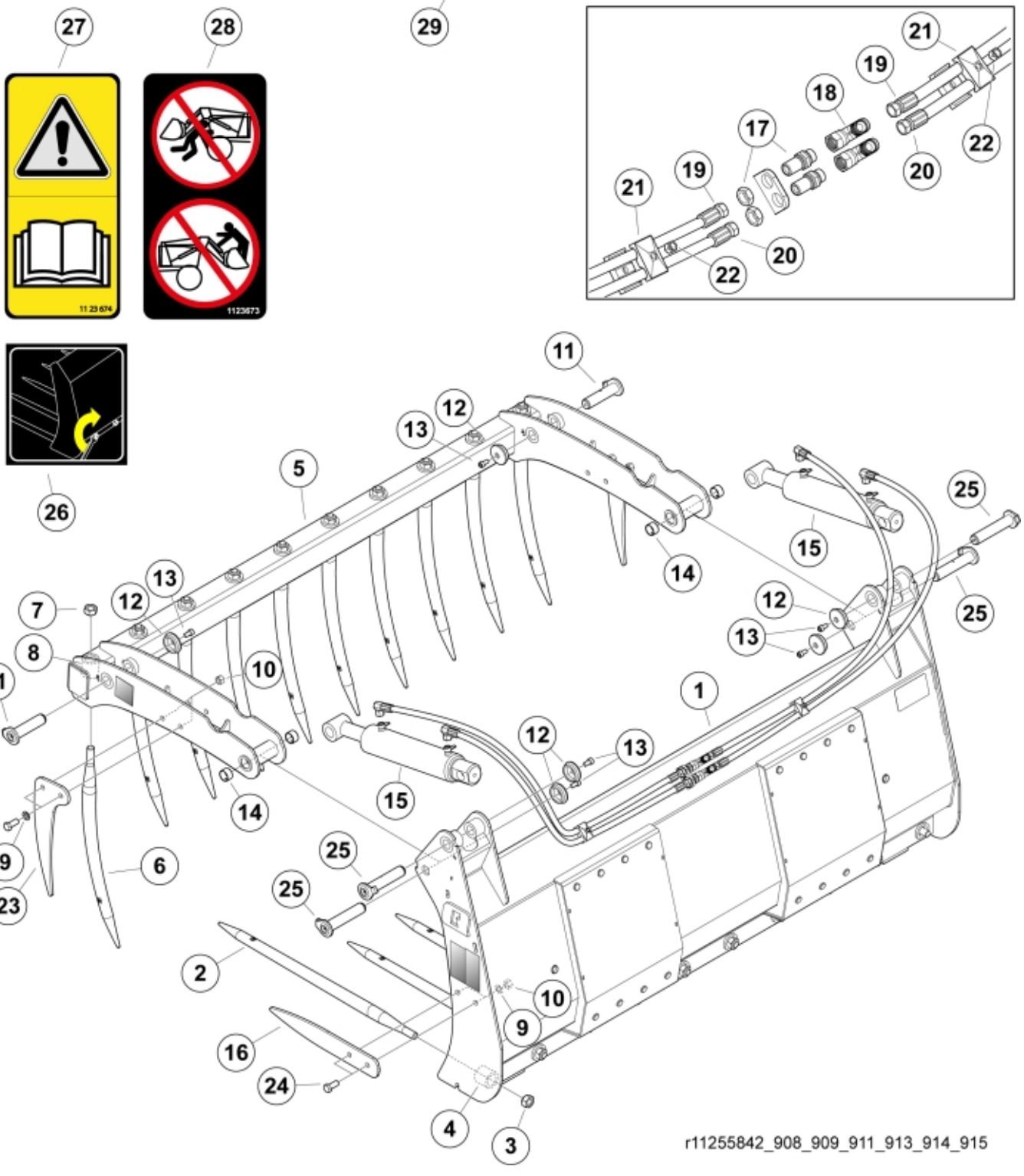

© 2025 Jost

Part assemblies		Silograb M+ 210		
Specification		Year From: 12/18/2020 12:00:00 AM		
PartNo	**Pos**	**Qty**	**Name**	**Specifications**
11255913		1	Silograb M+ 210	12/18/2020 12:00:00 AM
60054894-17	1	1	Frame, without tines	
5068109-17	2	11	Tine with nut	L=820mm (replaces 5068101)
5068111	3	1	• Nut	Conus 1
9010121	4	11	Sleeve	Conus 1
5022119		2	Plug	
11261855-17	5	1 PCS	Upper part, without tines	
5068112-17	6	11 PCS	Tine with nut	L=680, Curved
5068111	7	1	• Nut	Conus 1
9010120	8	11 PCS	Sleeve	Conus 1 Curved
5013107	9	8	Washer	BRB 15 x 26 x 2
5011556	10	8	Nut	M14
9020048	11	2 PCS	Pin	D=30mm, L=125mm
5215131	12	6	Locking cover	
5050608	13	6	Screw	MC6S M10x20 Loc
5018515	14	4	Bushing	D30 L=20
60110579-1	15	2	Cylinder	
11260256-22	16	2	Side tine	
11120580	17	2	Adapter cpl.	
5028031	18	2	T-Adapter	
60057124		1 PCS	Hose kit	
60057126	19	2	• Hose	3/8" L=1450 1/2GRLM 3/8G90LMC
60057125	20	2	• Hose	3/8" L=1250 1/2GRLM 3/8G90LMC
5016968	21	2	Hose clamp	
5011553	22	2	Nut	M6M M8 Loc-king
11260312-22	23	2	Side tine	
5002127	24	8	Screw	M6S M14 x 35
9020047	25	2	Pin	D=30mm, L=151mm
11136517	26	1	Warning decal	"Tightening of tine"
1123674	27	1	Warning decal	"Read manual"
1123673	28	1	Warning decal	
60054809	29	1 PCS	Decal	Silograb M+
5022119		2	Plug	

© 2025 Jost