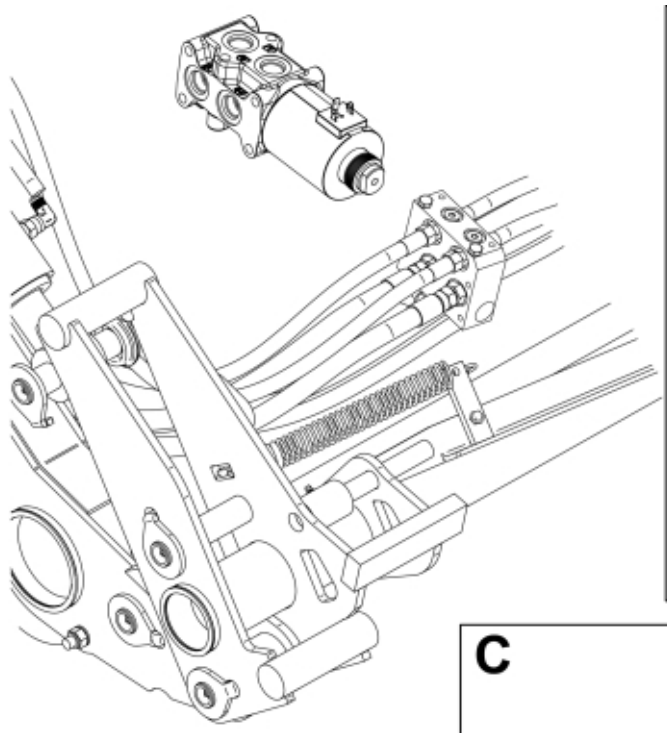

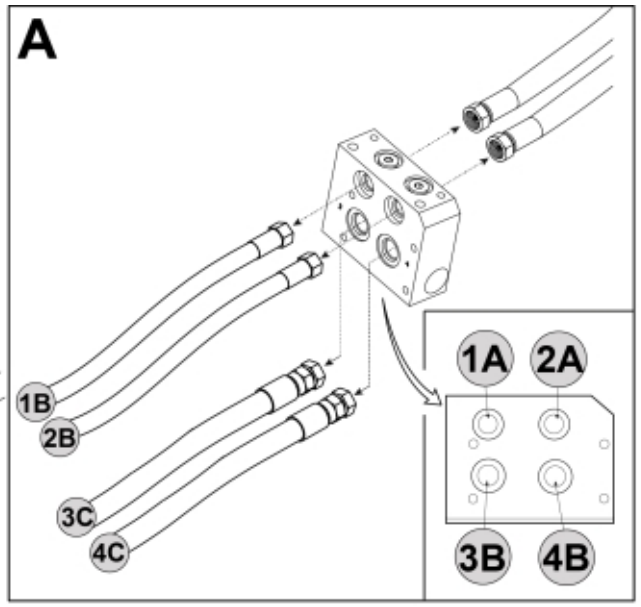
A
1A
2A
1B
2B
3C
4C
3B
4B

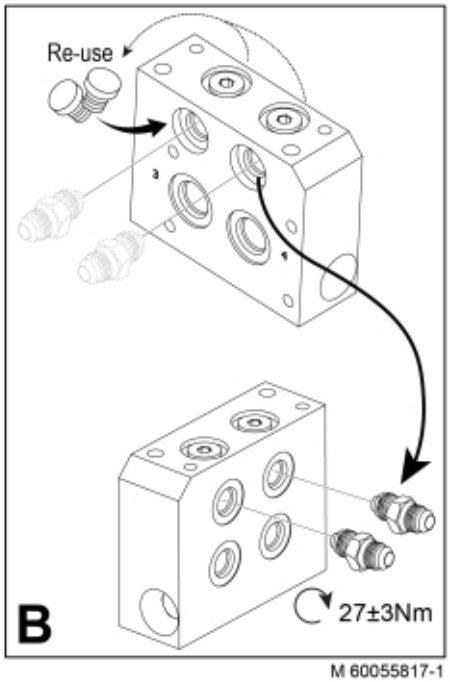
Re-use
B
27±3Nm
M 60055817-1

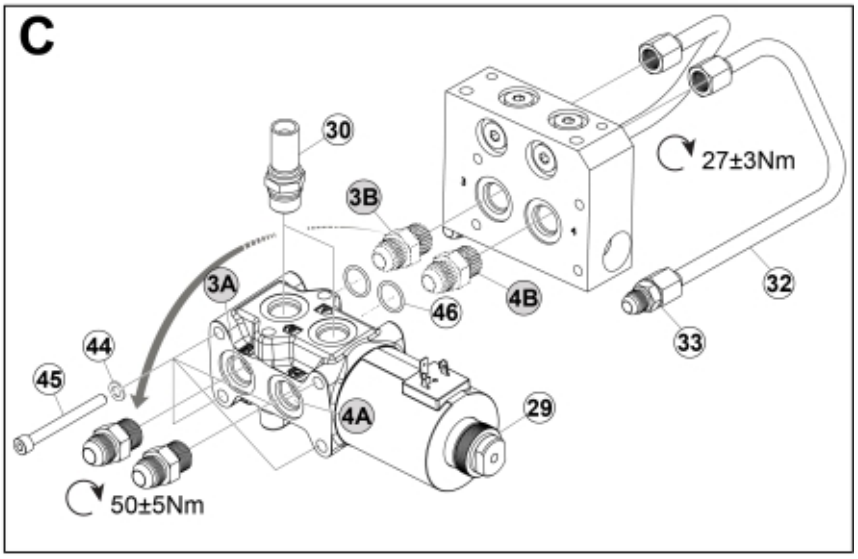
C
30
3B
27±3Nm
3A
4B
46
32
33
44
45
4A
29
50±5Nm

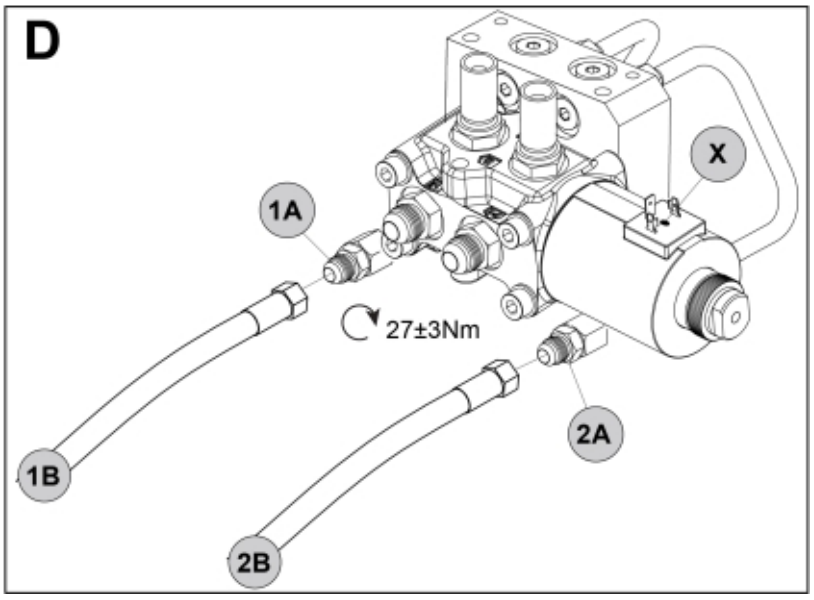
D
X
1A
27±3Nm
2A
1B
2B

© 2025 Jost

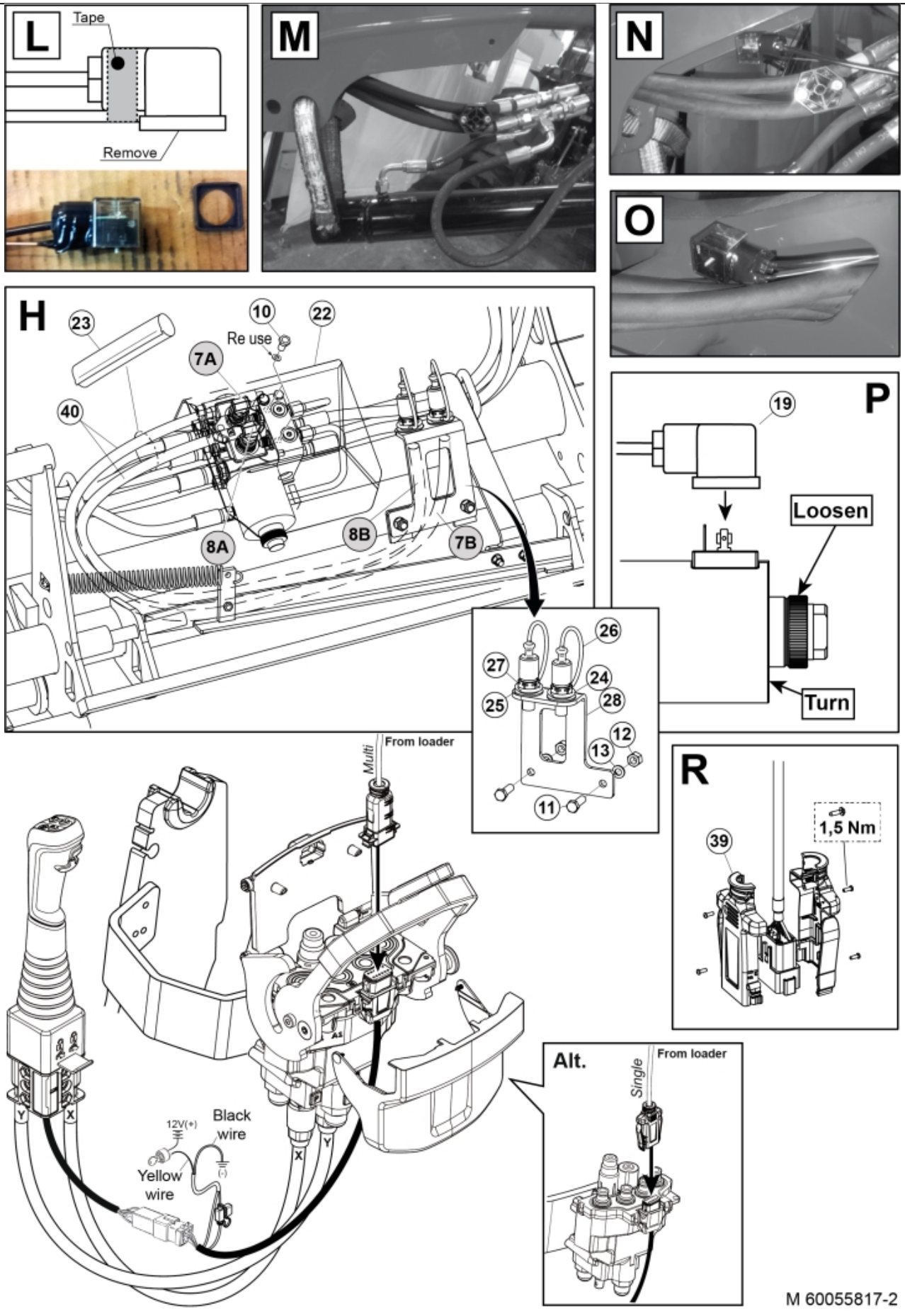
L
Tape
Remove
M
N
O
H
23
10
22
Re use
7A
40
8A
8B
7B
26
27
24
25
28
12
13
11
P
19
Loosen
Turn
R
39
1,5 Nm
From loader
Multi
Black wire
12V(+)
Yellow wire
Alt.
From loader
Single
M 60055817-2

© 2025 Jost

Part assemblies	3rd service	
Specification	Year From: 2/1/2016 12:00:00 AM	

PartNo	Pos	Qty	Name	Specifications
60055817		1	3rd service	2/1/2016 12:00:00 AM
5002060	10	2	Screw	M6S M8x12 (8,8)
5002077	11	2	Screw	M6S 10x30
5011554	12	2	Nut	Loc-King M10
5013102	13	2	Washer	BRB 10 x 18 x 2
59050120	19	1 PCS	Electr. Cable	
60009571	22	1	Protection plate	Replaces 5221270
5221975	23	1	Hose cover	
5222579		1	• Bracket kit	
5022157	24	1	• Washer, red	
5022159	25	1	• Washer, blue	
5044129	26	2	• Dust Cover	1/2" Male
5044940	27	2	• Coupling	ISO-A 1/2" Male - G3/8
5222580	28	1	• Bracket	
60009542	29	1	Valve assy.	Roquet
5028262	30	2	Adaptor	
5221303		2	• Oil pipe kit	
5222581	32	1	• Oil pipe	
5028109	33	1	• Adaptor	JIC 9/16"
59021021	39	1	Connector handle	
1103117	40	2	Hose	3/8"
5013101	44	4	Washer	BRB 8,4 x 16
5004054	45	4	Screw	MC6S M8x80
5050388	46	2	O-ring	Ø25 0,7x2,62

© 2025 Jost