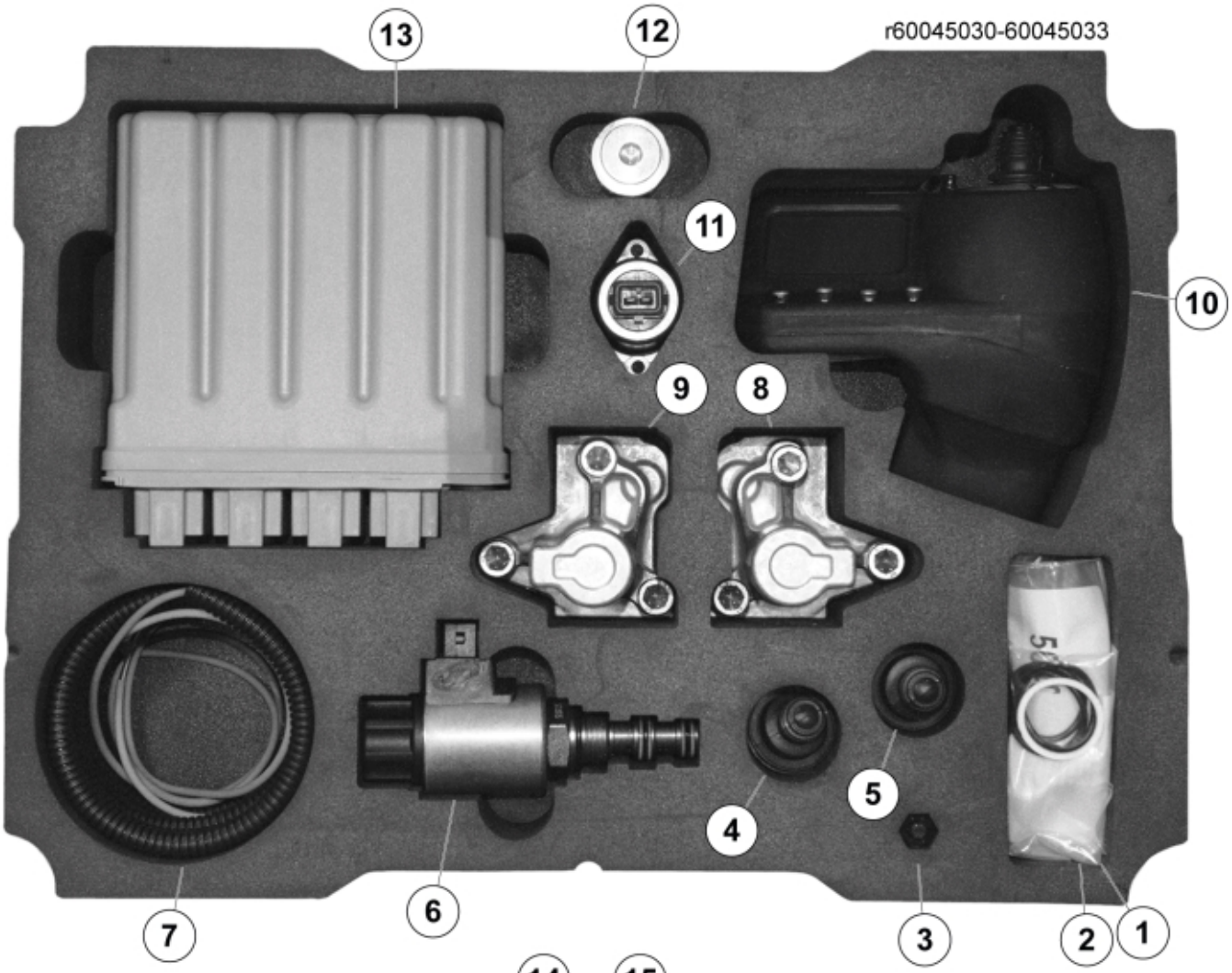
r60045030-60045033
13
12
11
10
9
8
5
4
7
6
3
2
1


14
Service Manual
Loader Control System
Original instructions

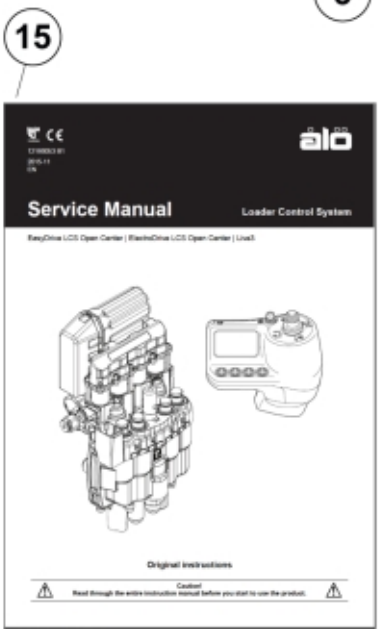
15
Service Manual
Loader Control System
Original instructions

© 2025 Jost

Part assemblies Service suitcase Electrodrive QS German

PartNo	Pos	Qty	Name	Specifications
60045030		1	Service suitcase Electrodrive QS German	
5040064	1	1	Seal kit	
4501260	2	1	Seal kit	LCS Electric, Part is included in kit 10570154 Valve STM Professional Live3 OC
60006414	3	1	Cap	
4501266	4	1	Thumb joystick	
4501267	5	1	Rubber boot	Replaces 60004085.
10570093	6	1	Solenoid	
5103106	7	1	Sensor	
10570186	8	1	Cap LH	Replaces 10570083, Part is included in kit 10570154 Valve STM Professional Live3 OC
10570187	9	1	Cap RH	(10570084), Part is included in kit 10570154 Valve STM Professional Live3 OC
4501087	10	1	Joystick ElectroDrive Qs	Replaces 60006437/60006439., - Note! Electrojoystick LCS replacement kit PN 4501279 is NOT compatible with loaders equipped with Live3 option (independent 3rd service). Please contact Quicke.
10570092	11	1	Solenoid	Part is included in kit 10570154 Valve STM Professional Live3 OC
10570068	12	1	Pressure relief valve	Part is included in kit 10570154 Valve STM Professional Live3 OC
60001960	13	1	Masterunit LCS L3	Replaces 5101068, Part is included in kit 10570154 Valve STM Professional Live3 OC
12166116	14	1	Manual	Service manual Electrodrive LCS Load sensing, German
12166115	15	1	Manual	French, Service manual Electrodrive LCS Open centre

© 2025 Jost