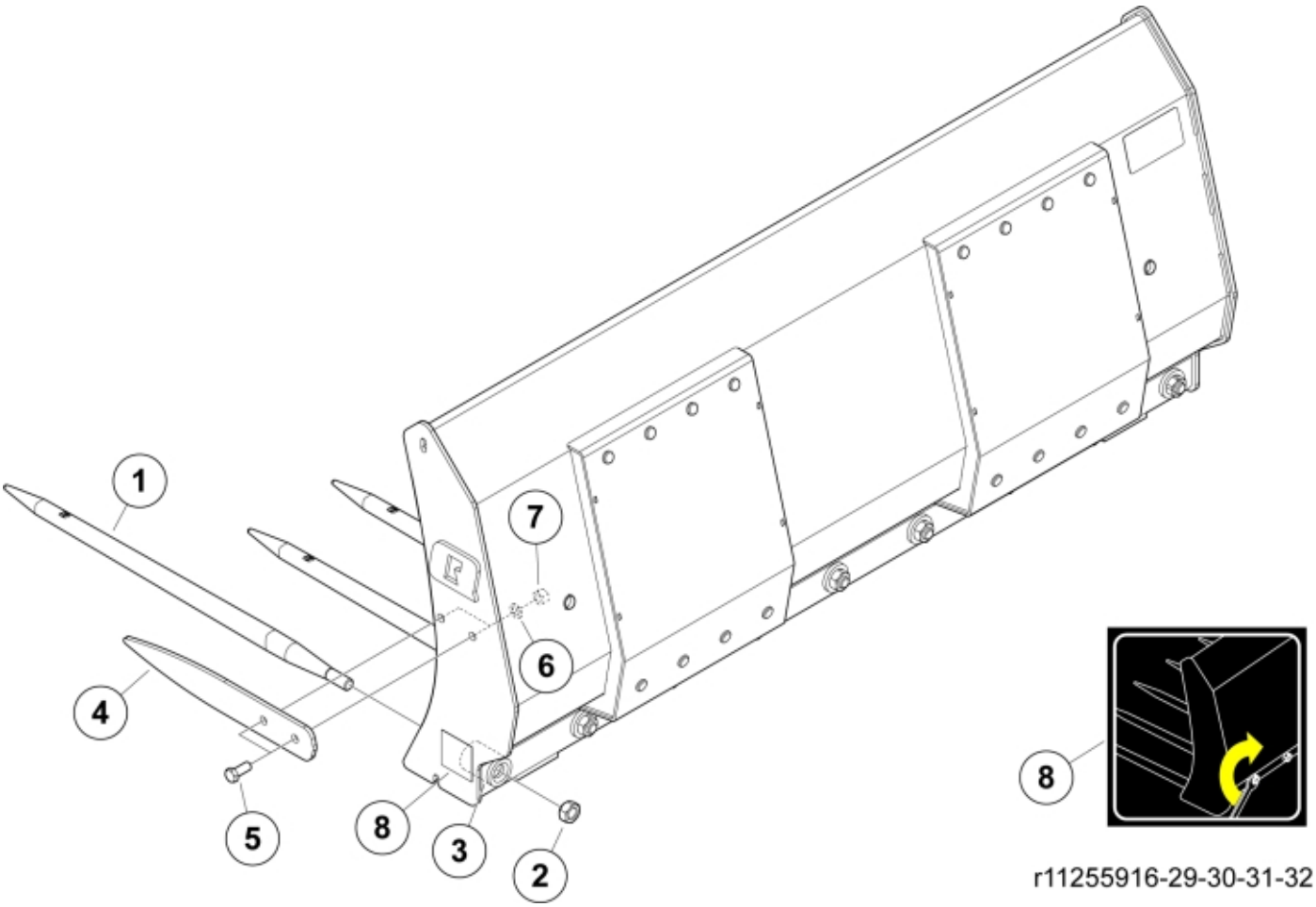


r11255916-29-30-31-32


© 2025 Jost

| | |
|---|---|
| **Part assemblies** | Manure Fork M+ 150 |
| **Specification** | Year From: 12/18/2020 12:00:00 AM |

| PartNo | Pos | Qty | Name | Specifications |
|---|---|---|---|---|
| 11255929 | | 1 | Manure Fork M+ 150 | 12/18/2020 12:00:00 AM |
| 5068109-17 | 1 | 8 | Tine with nut | L=820mm (replaces 5068101) |
| 5068111 | 2 | 1 | • Nut | Conus 1 |
| 9010121 | 3 | 8 | Sleeve | Conus 1 |
| 11260256-22 | 4 | 2 | Side tine | |
| 5002127 | 5 | 4 | Screw | M6S M14 x 35 |
| 5013107 | 6 | 4 | Washer | BRB 15 x 26 x 2 |
| 5011556 | 7 | 4 | Nut | M14 |
| 11136517 | 8 | 1 | Warning decal | "Tightening of tine" |
| 5022119 | | 2 | Plug | |


© 2025 Jost