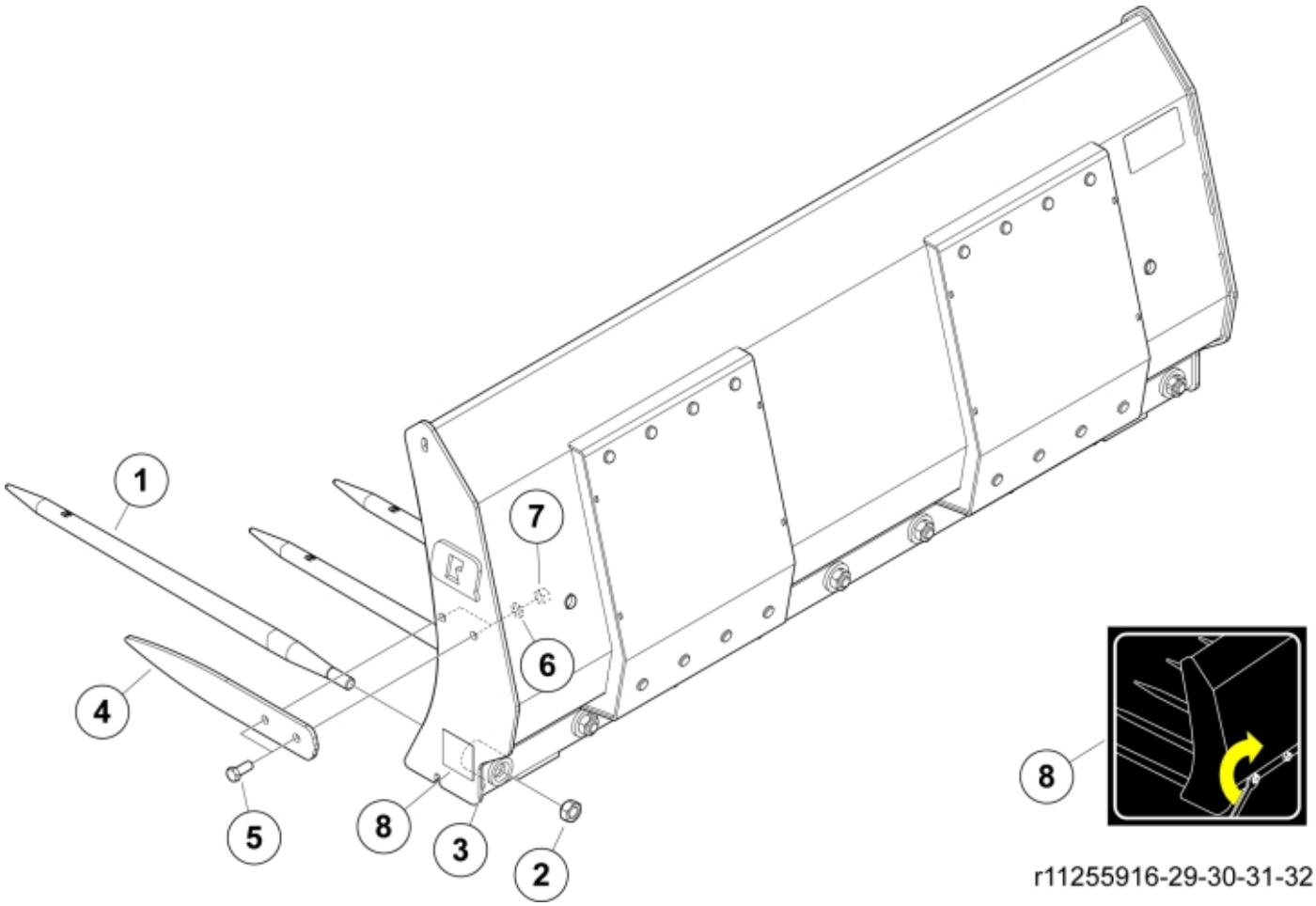

r11255916-29-30-31-32

© 2025 Jost

Part assemblies	Manure Fork M+ 230
Specification	Year From: 12/18/2020 12:00:00 AM

PartNo	Pos	Qty	Name	Specifications
11255932		1	Manure Fork M+ 230	12/18/2020 12:00:00 AM
5068109-17	1	12	Tine with nut	L=820mm (replaces 5068101)
5068111	2	1	• Nut	Conus 1
9010121	3	12	Sleeve	Conus 1
11260256-22	4	2	Side tine	
5002127	5	4	Screw	M6S M14 x 35
5013107	6	4	Washer	BRB 15 x 26 x 2
5011556	7	4	Nut	M14
11136517	8	1	Warning decal	"Tightening of tine"
5022119		2	Plug	

© 2025 Jost