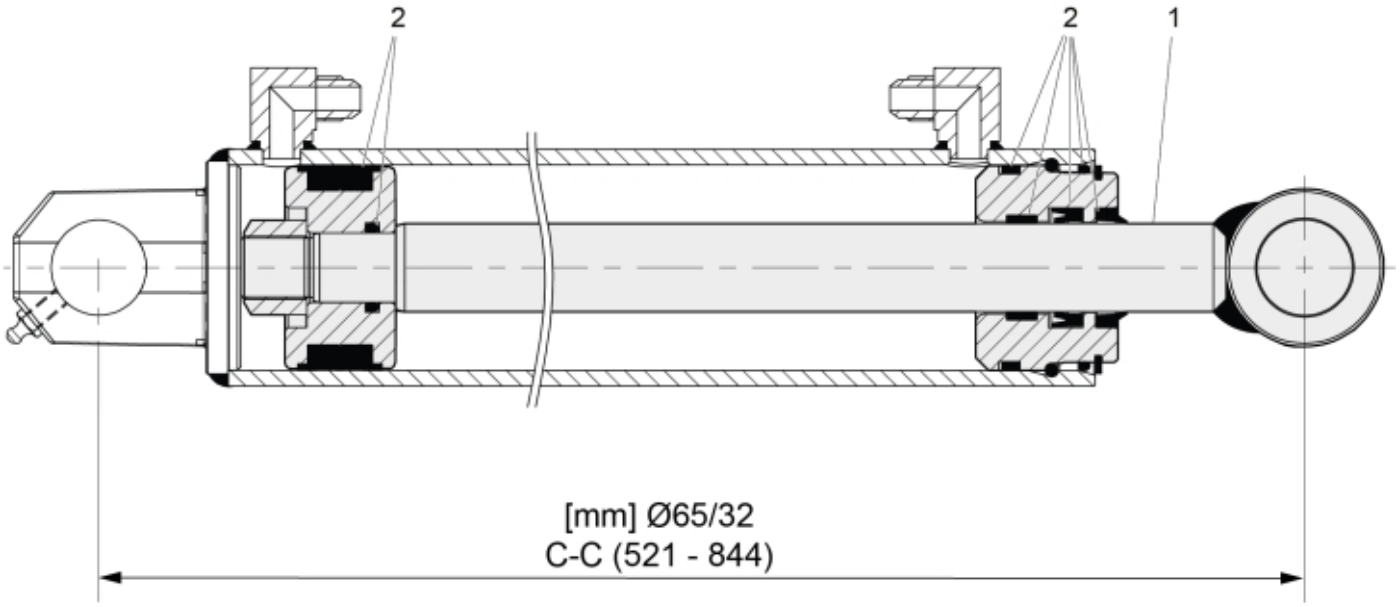


r60057790


© 2025 Jost

| | |
|---|---|
| **Description** | 65/32 |
| **Part assemblies** | Cylinder |

| PartNo | Pos | Qty | Name | Specifications |
|---|---|---|---|---|
| 60057791 | 1 | 1 | Piston rod cpl. | |
| 60048040 | 2 | 1 | Seal kit | |


© 2025 Jost