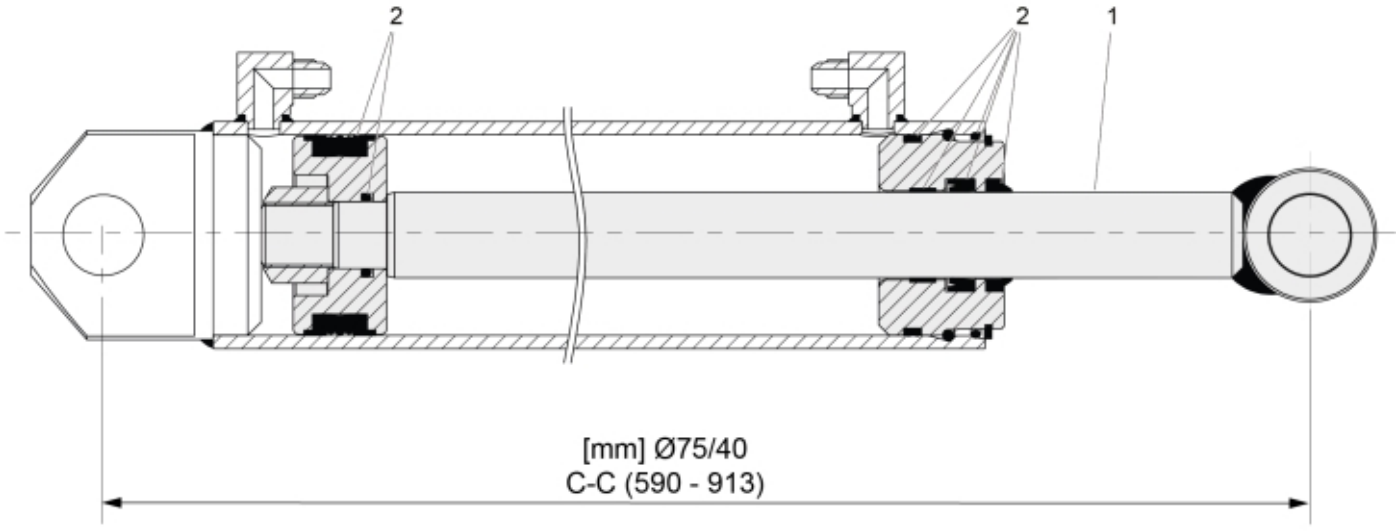

r60058145

© 2025 Jost

Description	75/40
Part assemblies	Cylinder
Specification	Specification: Glossy Black. Replaces 60007572-1, 12723010-1

PartNo	Pos	Qty	Name	Specifications
60058150	1	1	Piston rod cpl.	
60048043	2	1	Seal kit	

© 2025 Jost