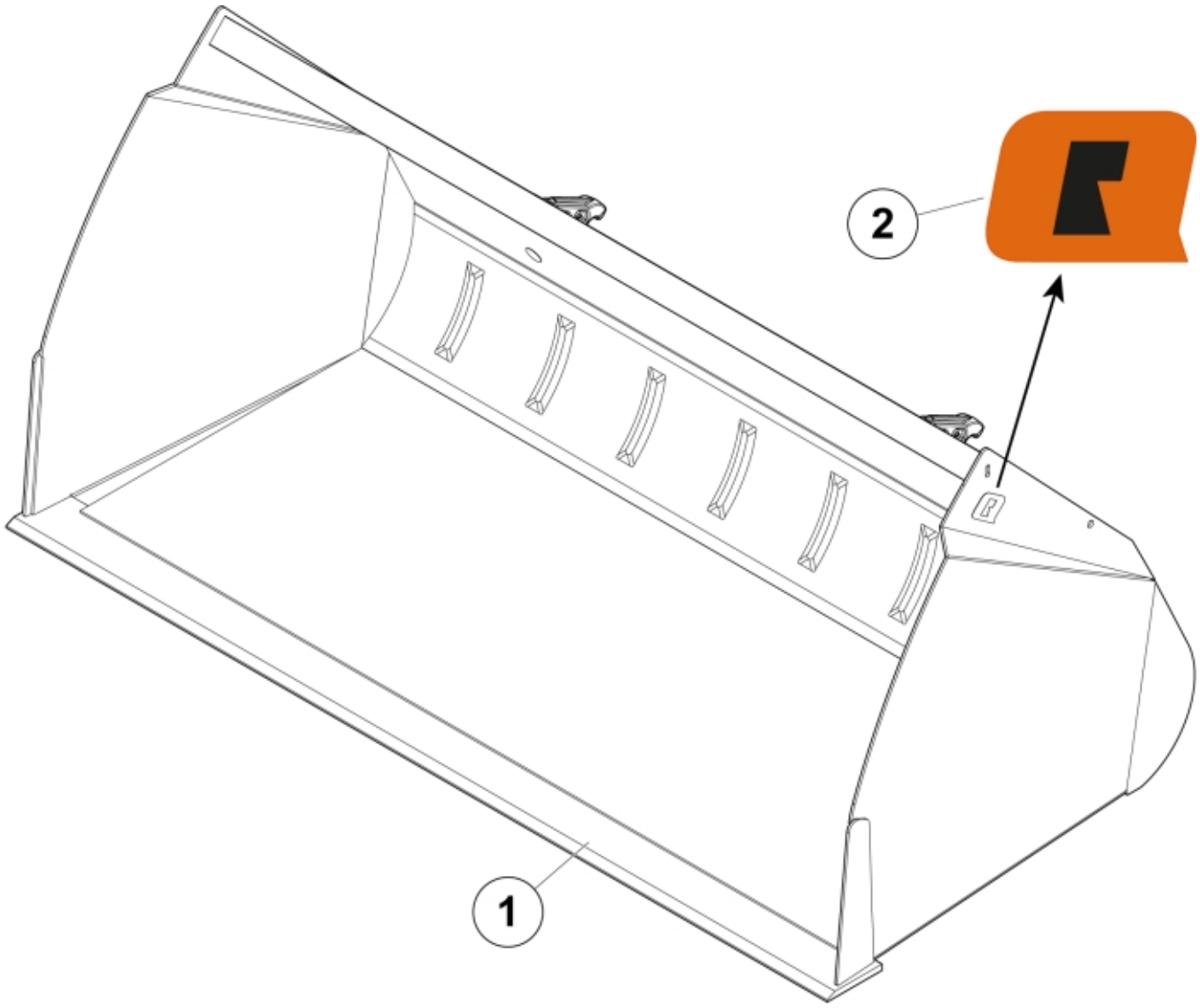

r11255877-80-83-87-91

© 2025 Jost

Part assemblies	Bucket VM 225 Euro
Specification	Year From: 10/1/2020 12:00:00 AM

PartNo	Pos	Qty	Name	Specifications
11255883		1	Bucket VM 225 Euro	10/1/2020 12:00:00 AM
60044762	1	1 PCS	Cutting edge	
60049053	2	2	Decal	"Q" small 80x57
5022119		2	Plug	

© 2025 Jost