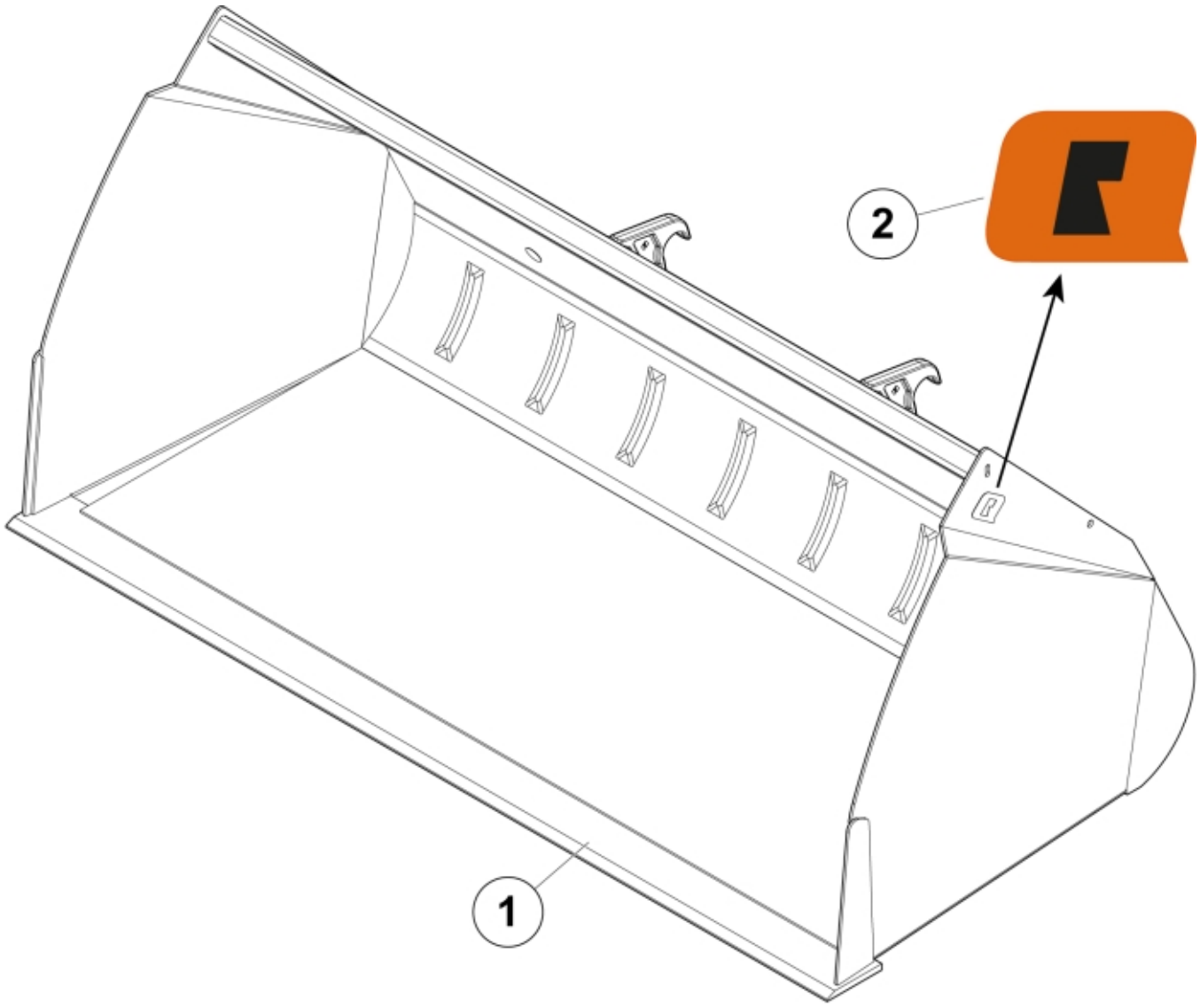

r11255879-82-86-89-93

© 2025 Jost

Part assemblies	Bucket VM 265 SMS
Specification	Year From: 10/1/2020 12:00:00 AM
	Year To: 1/19/2021 12:00:00 AM

PartNo	Pos	Qty	Name	Specifications
11255893		1	Bucket VM 265 SMS	10/1/2020 12:00:00 AM, 1/19/2021 12:00:00 AM
60044766	1	1 PCS	Cutting edge	
60049053	2	2	Decal	"Q" small 80x57
5022119		2	Plug	

© 2025 Jost