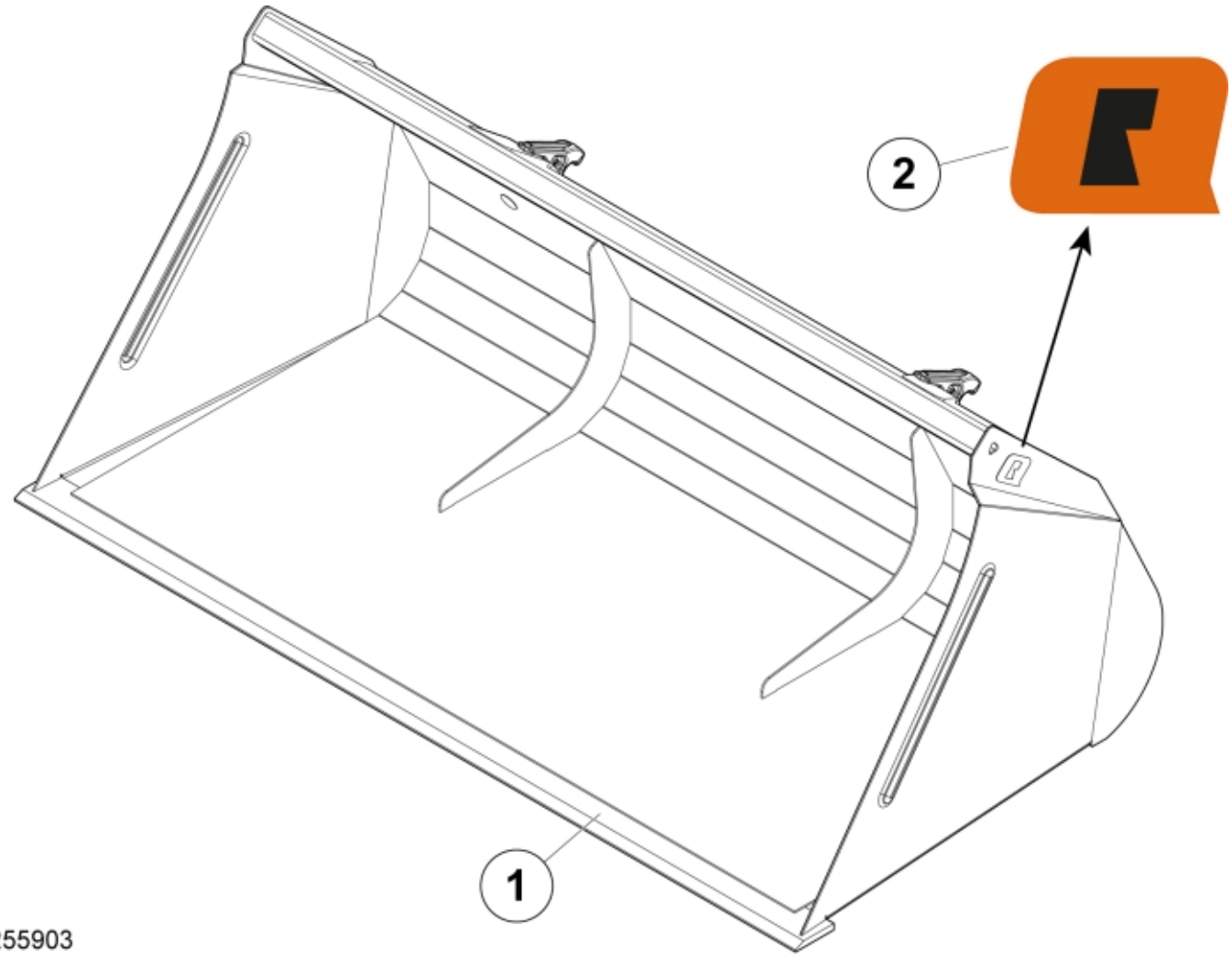

r11255903

© 2025 Jost

Part assemblies	Bucket VS 200 Euro
Specification	Year From: 11/1/2020 12:00:00 AM

PartNo	Pos	Qty	Name	Specifications
11255903		1	Bucket VS 200 Euro	11/1/2020 12:00:00 AM
60044770	1	1 PCS	Cutting edge	
60049053	2	2	Decal	"Q" small 80x57
5022119		2	Plug	

© 2025 Jost