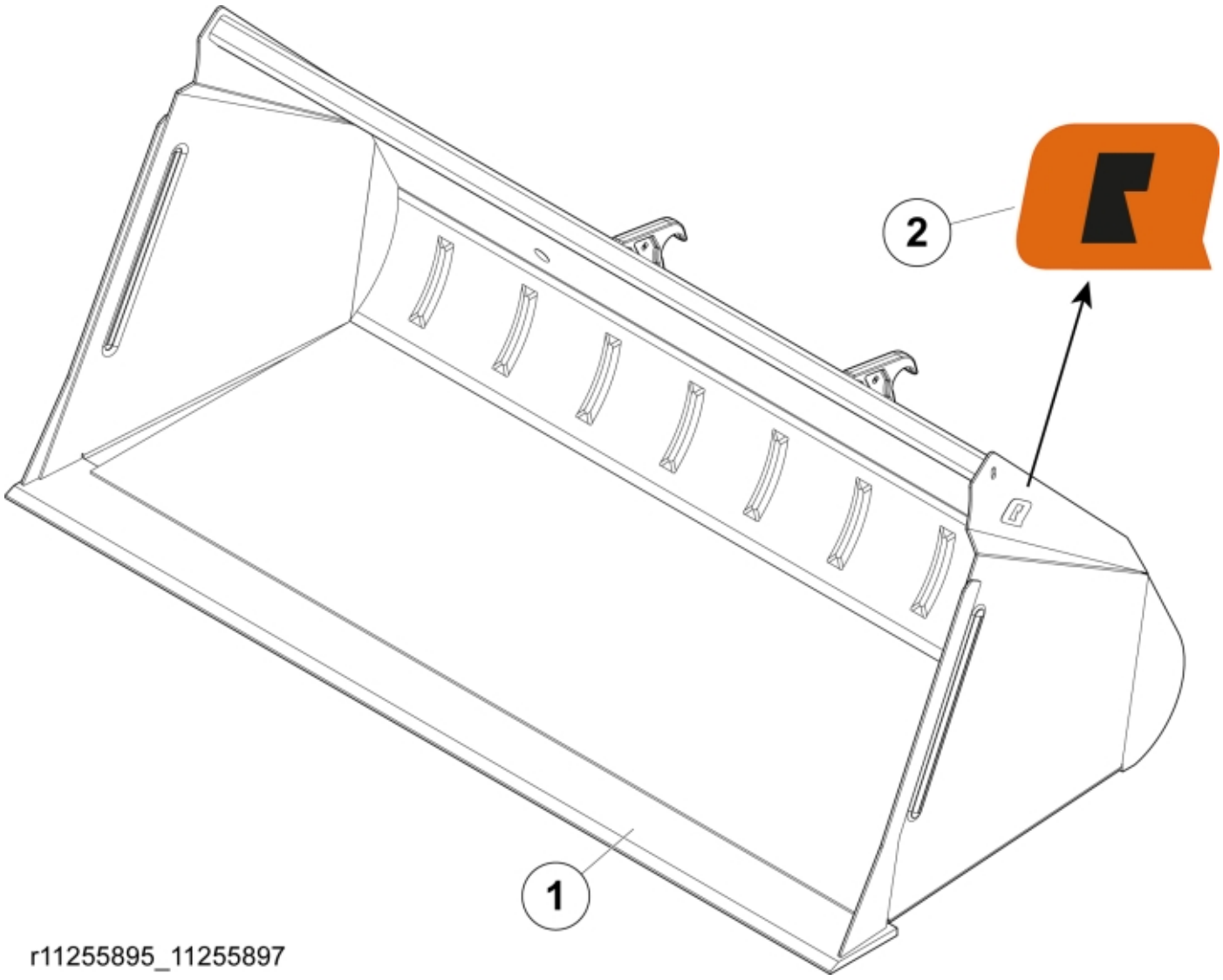

r11255895_11255897

© 2025 Jost

Part assemblies	Bucket VL 245 SMS
Specification	Year From: 9/1/2020 12:00:00 AM

PartNo	Pos	Qty	Name	Specifications
11255895		1	Bucket VL 245 SMS	9/1/2020 12:00:00 AM
60044765	1	1 PCS	Cutting edge	
60049053	2	2	Decal	"Q" small 80x57
5022119		2	Plug	

© 2025 Jost