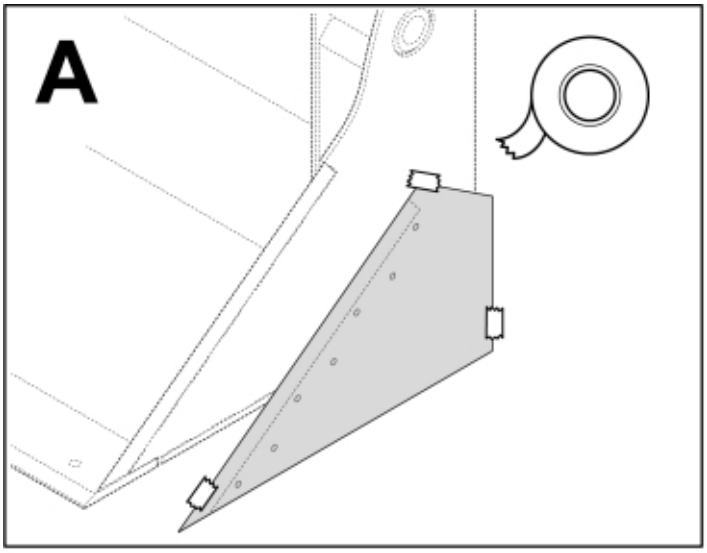

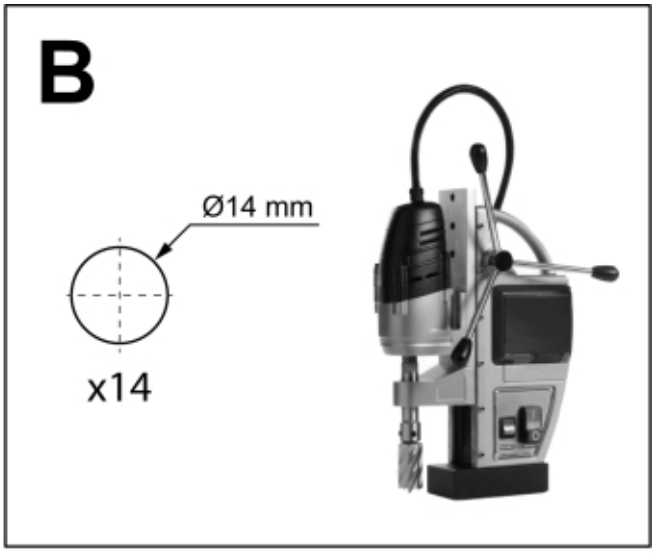

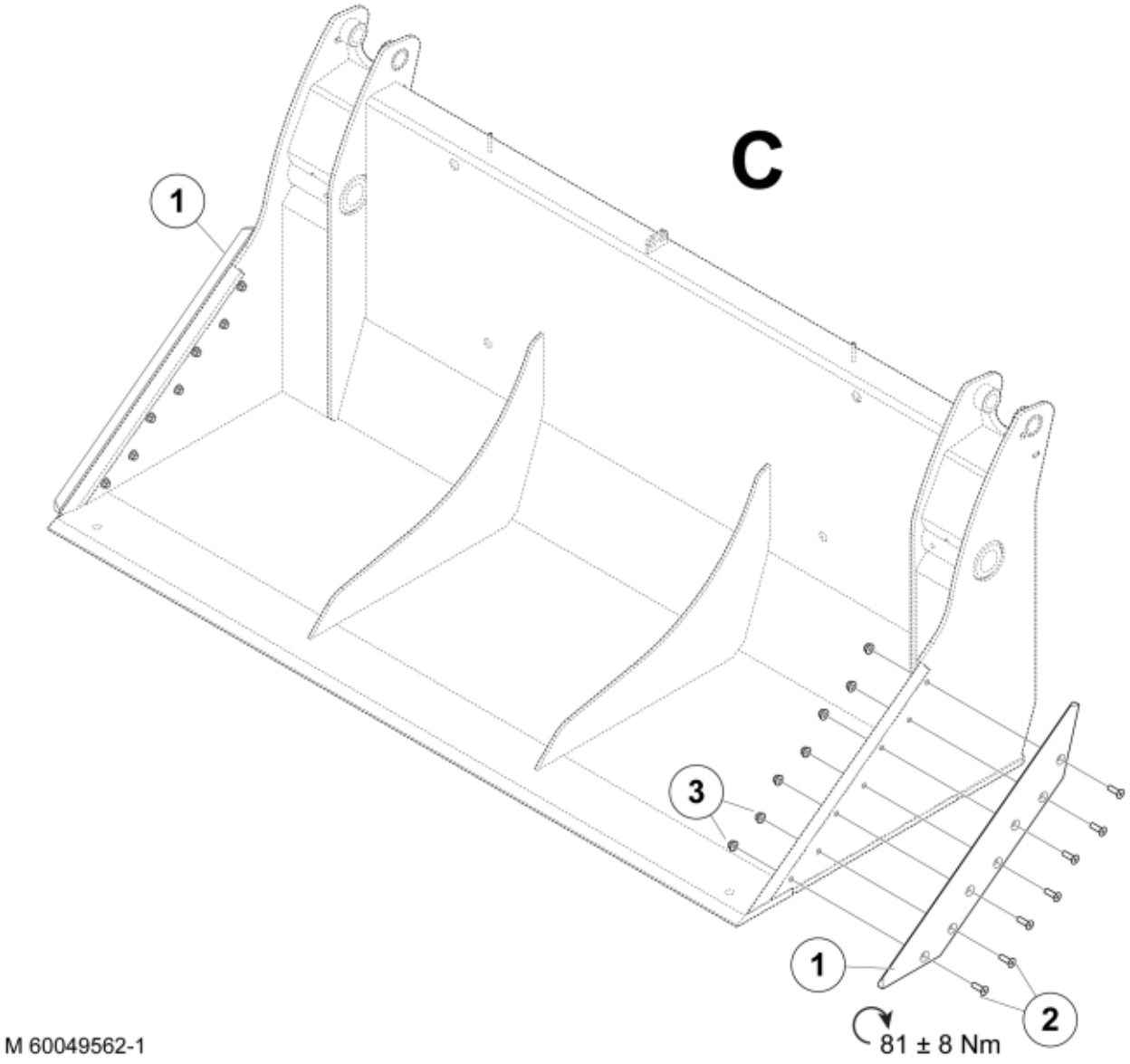

M 60049562-1

© 2025 Jost

Part assemblies	Reinforcement set
Specification	Specification: "Silocut XL"

PartNo	Pos	Qty	Name	Specifications
60049562		1 PCS	Reinforcement set	"Silocut XL"
60050368-22	1	2 PCS	Cutting edge	
5051849	2	14 PCS	Screw	MF6S M12x40
5051850	3	14 PCS	Nut	M6MF M12

© 2025 Jost