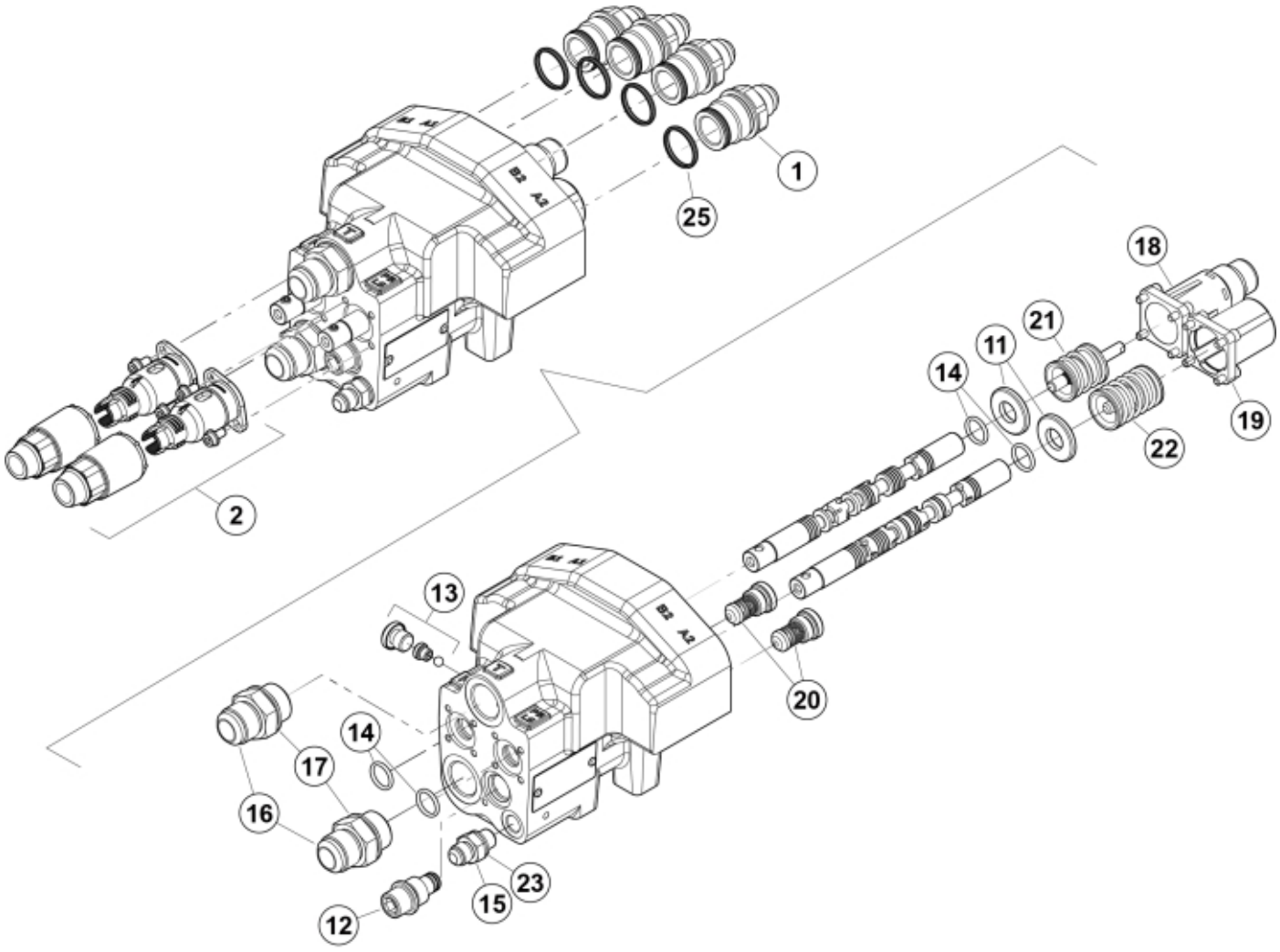

r59010152

© 2025 Jost

Part assemblies	QM Valve Midmounted LS
Specification	Specification: Load sensing

PartNo	Pos	Qty	Name	Specifications
59021042	1	4 PCS	Adaptor	7/8" JIC
59030499	2	1	Cable attachment kit	
5034344	11	2	Washer	16 x 34 x 4
59018002	12	1 PCS	Cartridge valve	
59018003	13	1 PCS	Shuttle valve	
5034349	14	4	O-ring	15,88 x 2,62
5027485	15	1	Adaptor	9/16" UNF JIC - R1/4"K
5027463	16	2	Adaptor	3/4" BSP-1 1/16" JIC
5013854	17	2	Dowty washer	Tredo 3/4"
5034352	18	1	Cap	
5034353	19	1	Cap	
521688	20	2	Check valve	XKIT 010000
5034355	21	1	Spool control	
5034357	22	1	Spool control	
5013856	23	1	Dowty washer	Tredo 1/4"
59018100	24	1	Seal kit	for valve
59021044	25	1	Seal kit	for coupling/adaptor (supplied in bags of 10)

© 2025 Jost