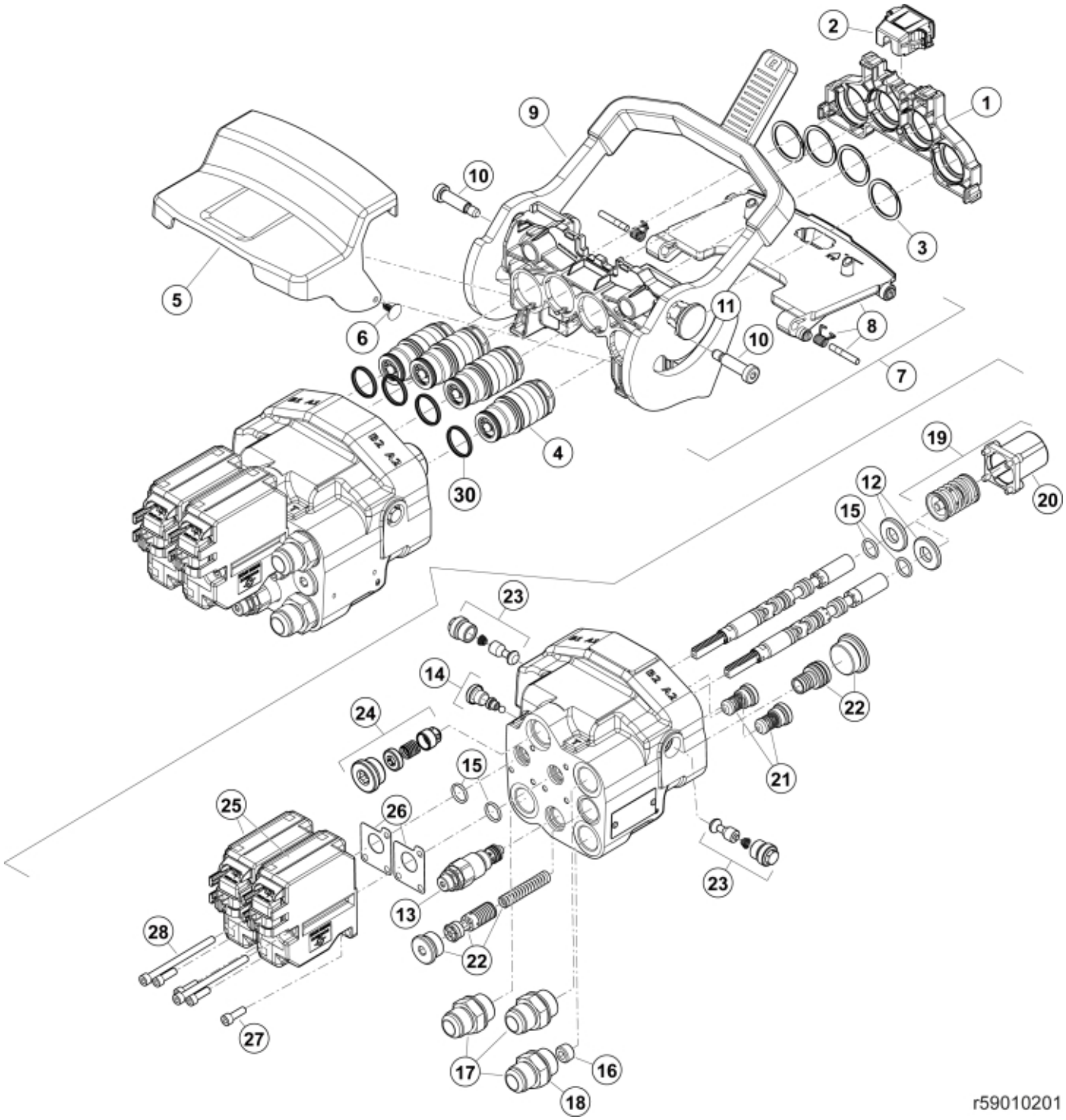
2
1
9
10
3
5
11
8
6
10
7
4
30
19
20
12
15
23
14
24
22
21
15
25
26
23
13
28
22
27
17
16
18
r59010201

© 2025 Jost

Part assemblies		QE Valve QC4 OC		
Specification		Specification: Open Centre		
PartNo	**Pos**	**Qty**	**Name**	**Specifications**
59021024	1	1	Cover	
59021025	2	1	Connector Support	
59021051	3	4	Circlip	
59021041	4	4	Coupling	
59000022	5	1	Cover	
59000025	6	2	Rivet	
59021004	7	1	Multi coupling base, QC4	
59021034	8	1	• Cover kit	
59021054	9	1	• Lever cpl, QC4	
59021062	10	1	• Screw kit	
59021063	11	1	• Safety lock	
5034344	12	2	Washer	16 x 34 x 4
59018201	13	1 PCS	Relief valve cpl.	200 bar
59018003	14	1 PCS	Shuttle valve	
5034349	15	4	O-ring	15,88 x 2,62
59018105	16	1 PCS	Plug	
5027463	17	3	Adaptor	3/4" BSP-1 1/16" JIC
5013854	18	3	Dowty washer	Tredo 3/4"
59018004	19	2 PCS	Spool control	
5034353	20	1	• Cap	
521688	21	2	Check valve	XKIT 010000
59018006	22	1 PCS	Shunt OC cpl.	
59018007	23	2 PCS	Anti-cavitation valve	
59018008	24	1 PCS	Backpressure valve	
59040300	25	2 PCS	Actuator	
59018009	26	2	• Seal	
5004913	27	2	• Screw	MC6S M6x20
5004945	28	1 PCS	• Screw	MC6S 6x90
59018200	29	1	Seal kit	for valve
59021044	30	1	Seal kit	for coupling/adaptor (supplied in bags of 10)

© 2025 Jost