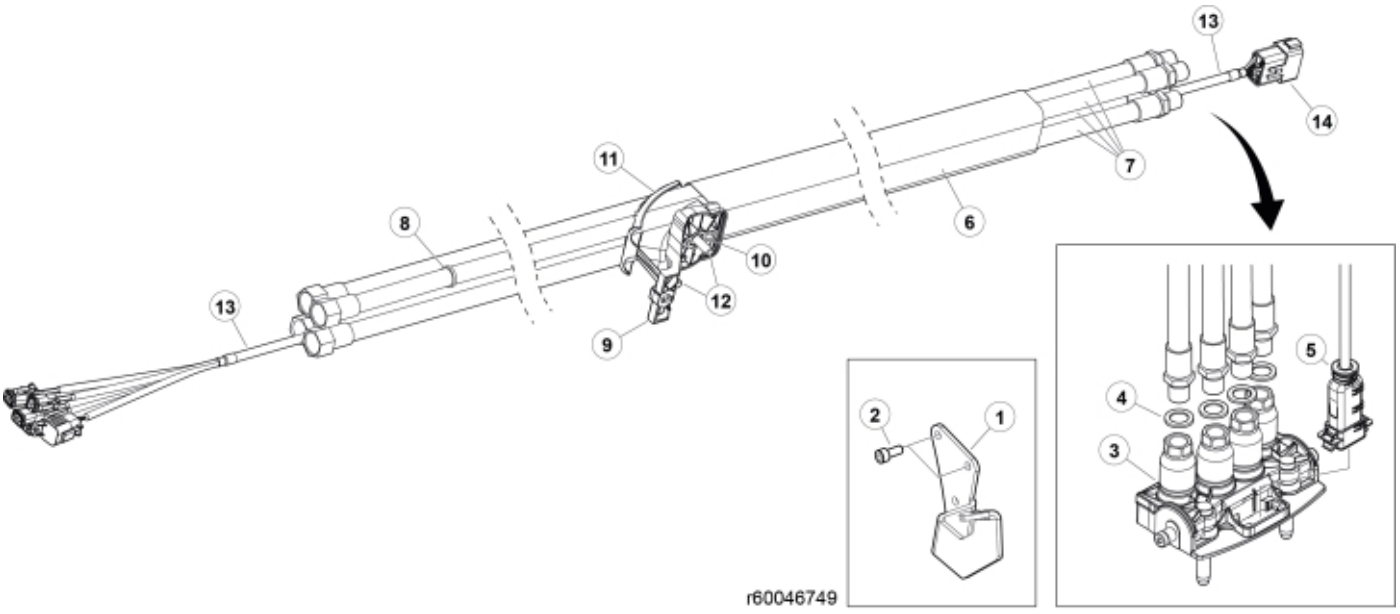

© 2025 Jost

Part assemblies Main hose kit, QC4

PartNo	Pos	Qty	Name	Specifications
60049421	1	1	Holder kit	
5004061	2	2	• Screw	MC6S M8x20
59020490	3	1	QC4 Mobile	
5013853	4	4	Dowty washer	Tredo 1/2", Part is included in kit 60007907 Hose cpl., 9032177 Hose cpl.
59021020	5	1	Connector handle	
5033894	6	1	Protection sleeve	800mm, D=60-70mm
60006917	7	4	Hose	1/2" L=3828 1/2GRU - 1/2GRLMA
5033621	8	7	Cable tie	4.6x150
60003841	9	1	Hose clamp	Lower
5011053	10	3	• Nut	M6M M8
60002825	11	1	Hose clamp	Upper
5004055	12	2	Screw	MC6S 8x70
59050109	13	1	Electr. Cable	L=4190
5050918	14	1	• Connector	Deutsch DT 12 pin female
5033606	15	1	Cable tie	7,5 x 385

© 2025 Jost