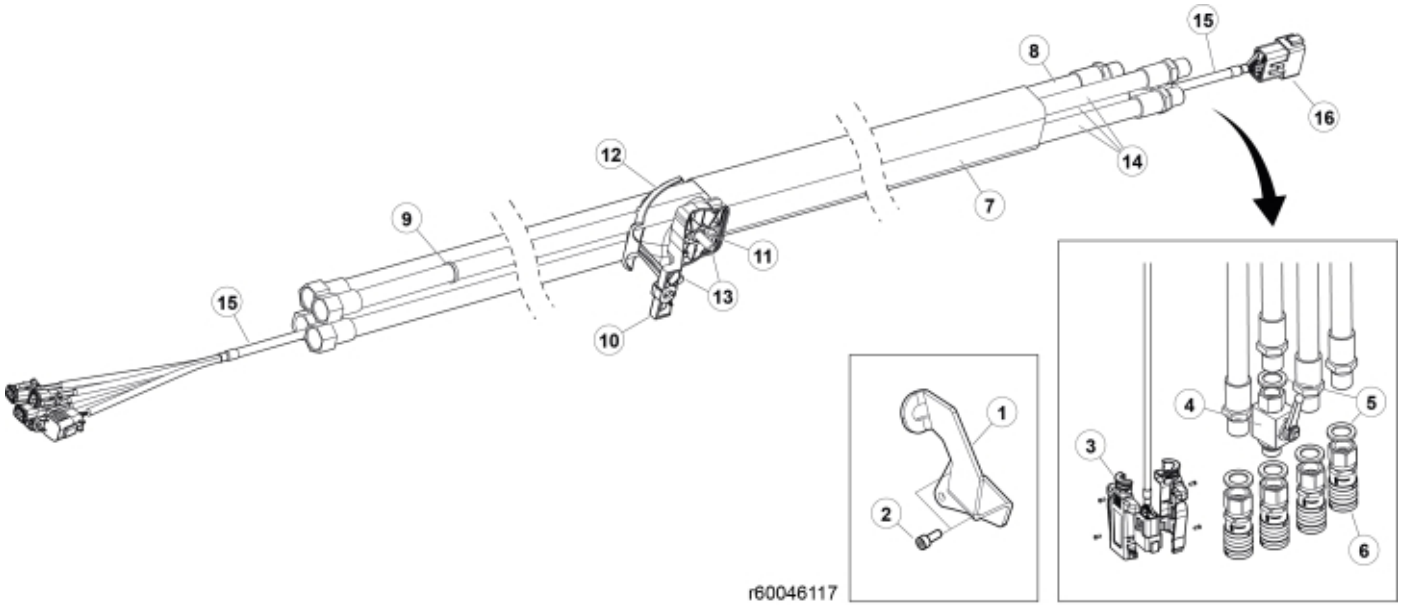

© 2025 Jost

Part assemblies Main hose kit, SF4

PartNo	Pos	Qty	Name	Specifications
60049421	1	1	Holder kit	
5004061	2	2	• Screw	MC6S M8x20
59021021	3	1	Connector handle	
5033898	4	1	Shut-off valve	1/2"
5013853	5	5	Dowty washer	Tredo 1/2", Part is included in kit 60007907 Hose cpl., 9032177 Hose cpl.
5044976	6	4	Coupling	3/8" (5044946)
5033894	7	1	Protection sleeve	800mm, D=60-70mm
60020124	8	1 PCS	Hose	1/2" L=3426 1/2GRU - 1/2GRLMA
5033621	9	6	Cable tie	4.6x150
60003841	10	1	Hose clamp	Lower
5011053	11	3	• Nut	M6M M8
60002825	12	1	Hose clamp	Upper
5004055	13	2	Screw	MC6S 8x70
60006823	14	3	Hose	1/2" L=3501 1/2GRU - 1/2GRLMA
59050110	15	1	Electr. Cable	L=3875
5050918	16	1	• Connector	Deutsch DT 12 pin female
5033606	17	1	Cable tie	7,5 x 385

© 2025 Jost