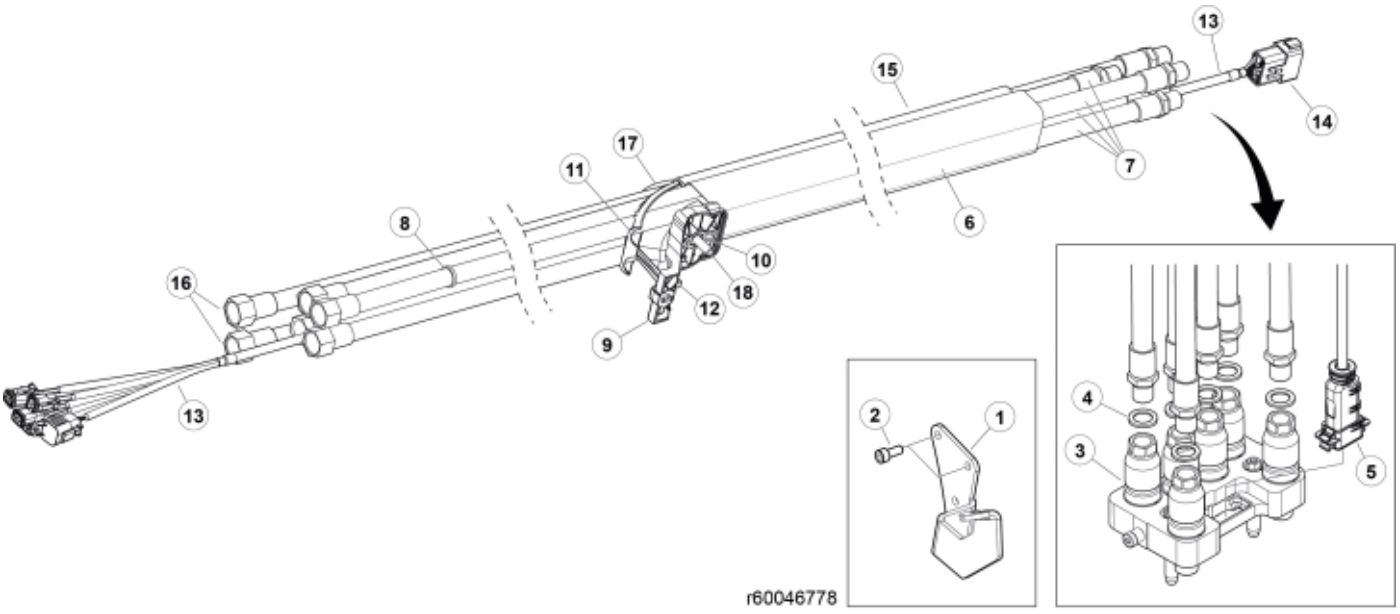

© 2025 Jost

Part assemblies Main hose kit, QC6c

PartNo	Pos	Qty	Name	Specifications
60049421	1	1	Holder kit	
5004061	2	2	• Screw	MC6S M8x20
59020690	3	1 PCS	QC6c Mobile	1/2"
5013853	4	6	Dowty washer	Tredo 1/2", Part is included in kit 60007907 Hose cpl., 9032177 Hose cpl.
59021020	5	1	Connector handle	
5033894	6	1	Protection sleeve	800mm, D=60-70mm
60013038	7	4	Hose	1/2" L=3908 1/2GRU - 1/2GRLMA
5033621	8	7	Cable tie	4.6x150
60003841	9	1	Hose clamp	Lower
5011053	10	3	• Nut	M6M M8
60002825	11	1	Hose clamp	Upper
5004055	12	1	Screw	MC6S 8x70
59050109	13	1	Electr. Cable	L=4190
5050918	14	1	• Connector	Deutsch DT 12 pin female
5034121	15	1	Protection sleeve	
60013040	16	2	Hose	3/8" L=3988 1/2GRU - 3/8GRLMA
60003881	17	1	Hose clamp	
60012277	18	1	Screw	MC6LS M8x80 (8.8)
5033606	19	1	Cable tie	7,5 x 385

© 2025 Jost