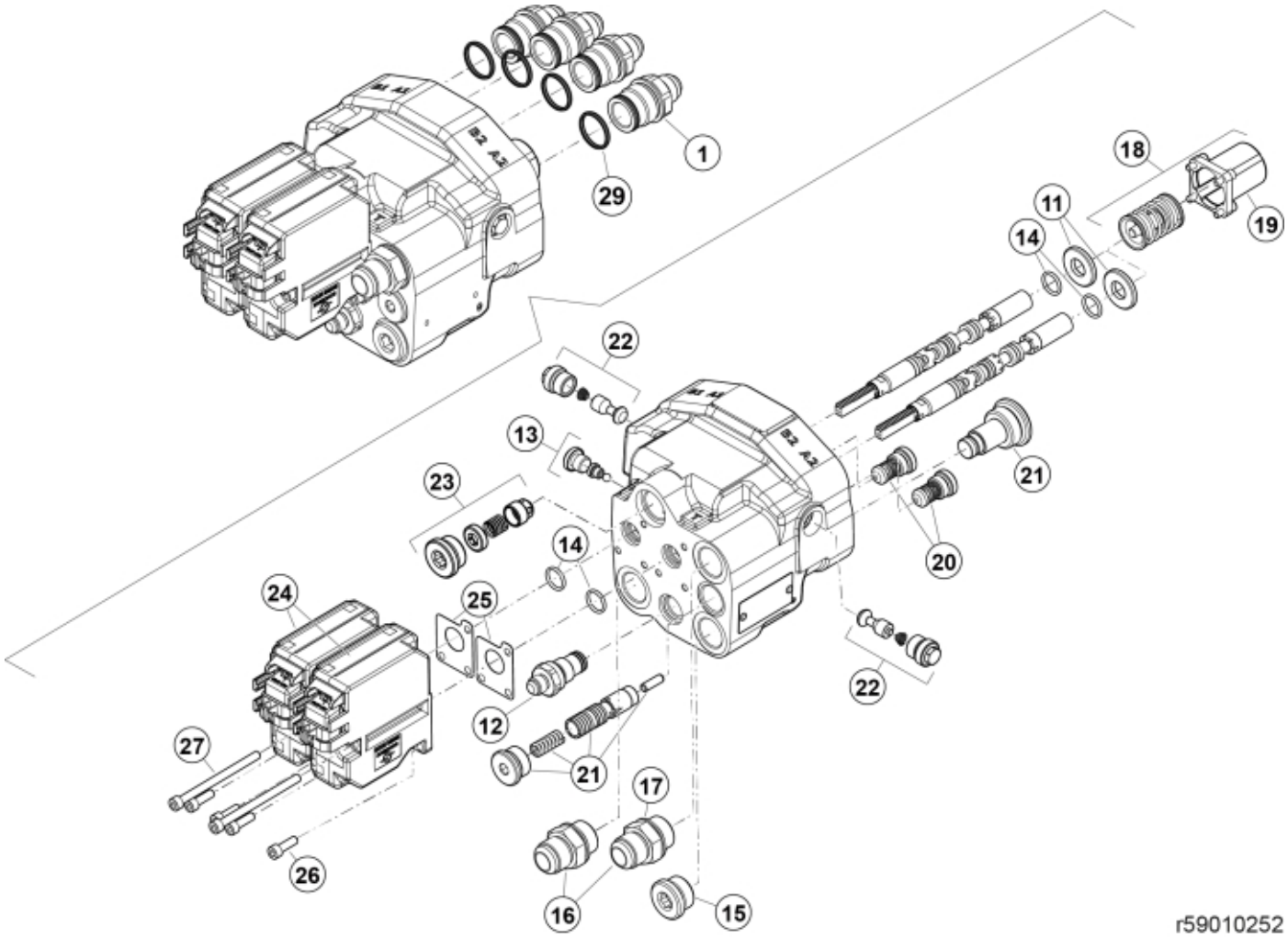
1
29
18
19
11
14
22
13
23
21
20
14
24
25
22
12
21
27
17
26
16
15
r59010252

© 2025 Jost

Part assemblies		QE Valve Midmounted LS		
Specification		Specification: Load sensing		
PartNo	**Pos**	**Qty**	**Name**	**Specifications**
59021042	1	4 PCS	Adaptor	7/8" JIC
5034344	11	2	Washer	16 x 34 x 4
59018011	12	1 PCS	LS connection	9/16 JIC
59018003	13	1 PCS	Shuttle valve	
5034349	14	4	O-ring	15,88 x 2,62
5028081	15	1 PCS	Plug	R 3/4"
5027463	16	2	Adaptor	3/4" BSP-1 1/16" JIC
5013854	17	2	Dowty washer	Tredo 3/4"
59018004	18	2 PCS	Spool control	
5034353	19	1	• Cap	
521688	20	2	Check valve	XKIT 010000
59018010	21	1 PCS	Heat flow regulator	
59018007	22	2 PCS	Anti-cavitation valve	
59018008	23	1 PCS	Backpressure valve	
59040300	24	2 PCS	Actuator	
59018009	25	2	• Seal	
5004913	26	2	• Screw	MC6S M6x20
5004945	27	1 PCS	• Screw	MC6S 6x90
59018200	28	1	Seal kit	for valve
59021044	29	1	Seal kit	for coupling/adaptor (supplied in bags of 10)

© 2025 Jost